H-BAU TECHNIK

KUNEX®

Thermoplastic joint tapes

Sealing ▪ Thermal insulation ▪ Formwork ▪ Sound insulation ▪ Reinforcement ▪ Connection ▪ Accessories

Forward
Constructing.

OUR MISSION:
FORWARD CONSTRUCTING.

It is our mission not only to provide the very latest building technology, but also to be one crucial step ahead of the game at all times. That is why we are constantly undertaking pioneering work in all product areas. Our employees consistently put their extensive practical experience and creativity to use in the interests of our customers. In constant dialogue with our target groups on a partnership basis, we are already developing the products today that will be needed tomorrow. Our momentum continues to set new benchmarks in structural engineering – yesterday, today and tomorrow, too. This is what we mean by "forward constructing".

CONTENTS

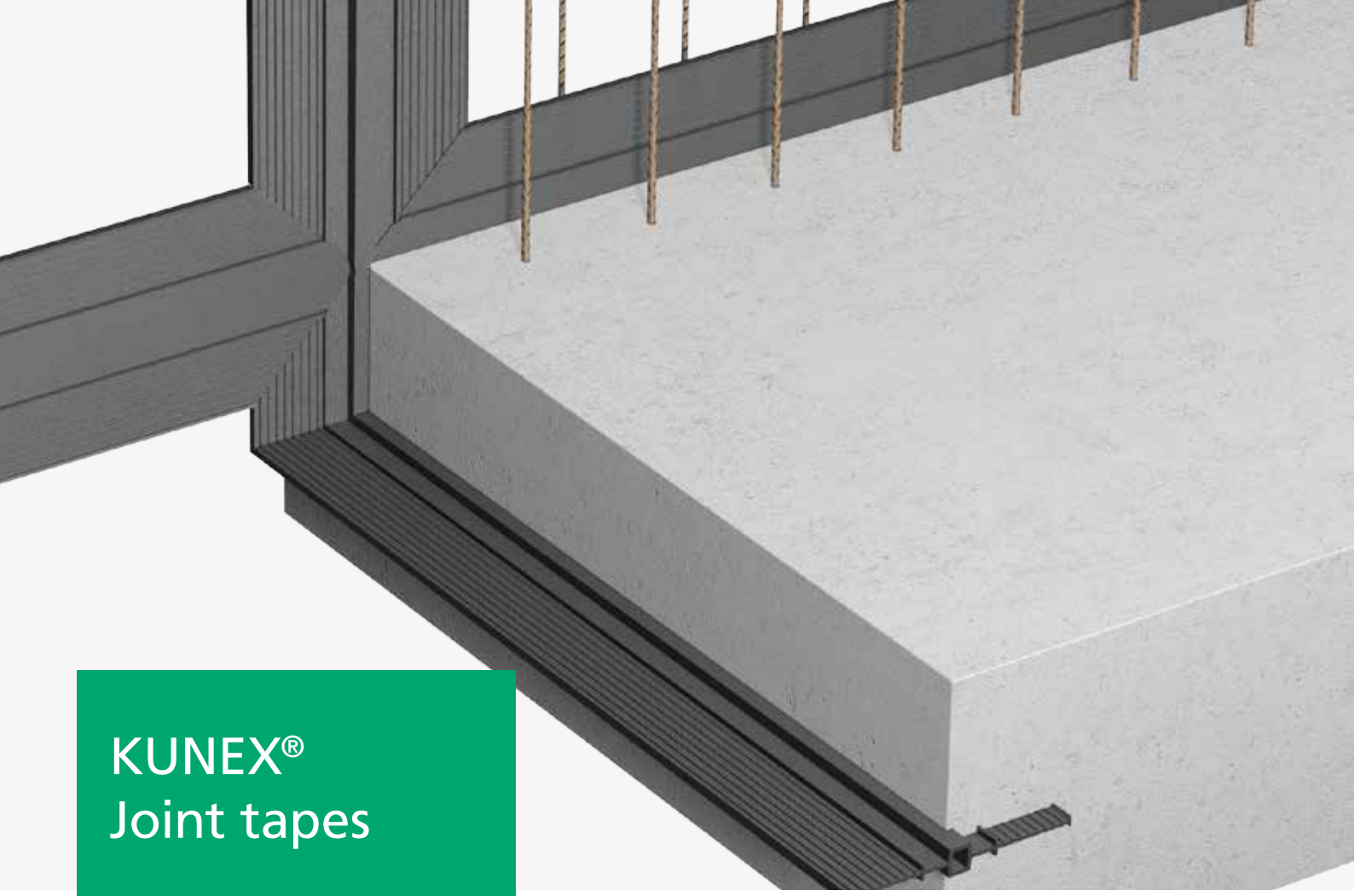

KUNEX® Joint tapes

FOR SEALING CONSTRUCTION AND EXPANSION JOINTS IN CONCRETE

THE PRODUCT

KUNEX® internal or external thermoplastic joint tapes are used for sealing construction and expansion joints in concrete. Thanks to the design of the joint tape profile, the circulation path of standing water in the joint is extended, thereby sealing the joint. Thermoplastic joint tapes can be welded together to ensure water-tightness.

ADVANTAGES

- Joint tapes in accordance with DIN 18541
- Joint tapes in accordance with company standard (with abP)
- Steel-reinforced joint tapes
- Joint tapes with eyelets
- Very good welding properties

THE APPLICATION

KUNEX® quality joint tapes are used in all construction and expansion joints, horizontal or vertical, against pressing and non-pressing water, and against soil moisture:

- Foundation slab-wall or wall-ceiling construction joint
- Floor-floor, wall-wall, or ceiling-ceiling construction and expansion joints
- Dummy joints in in-situ concrete or element walls

KUNEX® joint tapes are suitable for use in structures in accordance with watertight structure guidelines.

TECHNICAL INFORMATION

MATERIALS

PVC-P raw material in the following quality classes:

- DIN 18541 compatible with bitumen (BV) or not compatible with bitumen (NB)
- Company standard compatible with bitumen (BV) or not compatible with bitumen (NB)

COMPATIBILITY WITH BITUMEN

Joint tapes correspond as standard to the quality class NB (not compatible with bitumen). The joint tapes are optionally available in the quality class BV (compatible with bitumen).

PVC-P IN ACCORDANCE WITH DIN 18541

Joint tapes made of soft PVC in the "DIN" quality class are ideal for use in structures under very high load. These joint tapes comply with the high standards of DIN 18541. Continuous production inspections guarantee a consistently high level of quality. The special formula further improves the characteristic properties of these joint tapes. They are more elastic and have a higher yield point and tensile strength.

PVC-P IN ACCORDANCE WITH COMPANY STANDARD

Joint tapes made of soft PVC in the "company standard" quality class are ideal for use in concrete structures under normal load. The advantages of this quality class are its good workability, welding properties, resistance and optimised cost-effectiveness.

MATERIAL CHARACTERISTICS

Properties	PVC-P	
	DIN 18541	Company standard
Tensile strength acc. to DIN EN ISO 527	≥ 10 N/mm²	≥ 9 N/mm²
Yield point acc. to DIN EN ISO 527	≥ 350%	≥ 230%
Shore A hardness acc. to DIN 53505	67 ± 5	67 ± 5
Fire properties acc. to DIN EN 13501	Normally flammable (material class E)	
Temperature resistance	-20 to +60 °C	

TRANSPORTATION AND STORAGE

TRANSPORTATION

The joint tape must be loaded and unloaded carefully and secured for transportation. It must be examined for damage and completeness on delivery. At high ambient temperatures, joint tapes must be transported with care and laid out flat at the installation site.

STORAGE IN WINTER

In winter, joint tapes made from PVC-P must be stored in closed rooms and on a solid, dry base (transport pallet) where possible. To allow easier installation and processing, we recommend interim storage in a heated room before use.

STORAGE IN SUMMER

It is important to store joint tapes in a cool and dry place in summer. In addition, joint tapes must be protected from direct sunlight (e.g. by covering them).

TECHNICAL INFORMATION

KUNEX® INTERNAL CONSTRUCTION JOINT TAPE

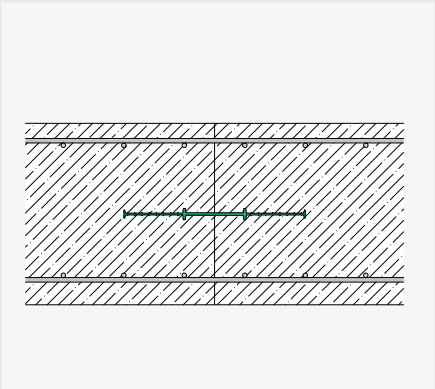

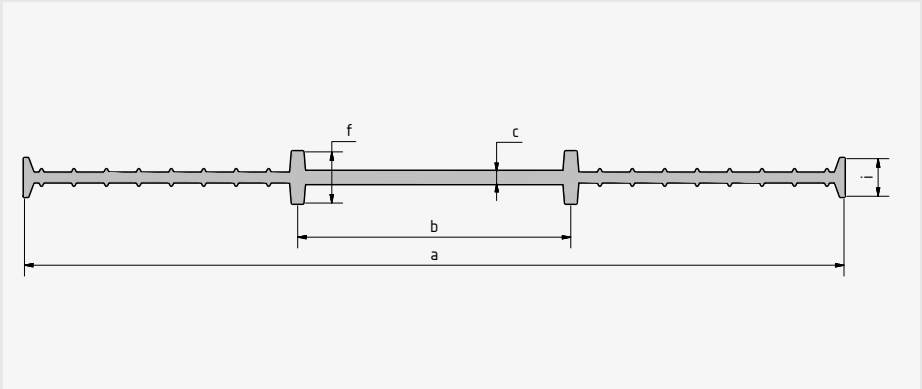

DIMENSIONS

Type DIN 18541	Type Company standard	a [mm]	f [mm]	b [mm]	c [mm]	i [mm]
–	A100	100	8	47	2.0	8
–	A150	150	15	55	3.0	11
–	A190	190	15	70	3.0	11
A240 DIN	A240	240	15	80	3.5	11
A320 DIN	A320	320	15	100	4.5	11
A500 DIN	A500	500	20	150	6.0	11

Joint tapes up to 320 mm wide can, upon request, be delivered with fastening eyelets on one (o) or both sides (o2).
The eyelet spacing is 200 mm. The fastening eyelets replace the joint tape clips which would otherwise be necessary to fasten the joint tapes.

TECHNICAL INFORMATION

KUNEX® STEEL-REINFORCED CONSTRUCTION JOINT TAPE

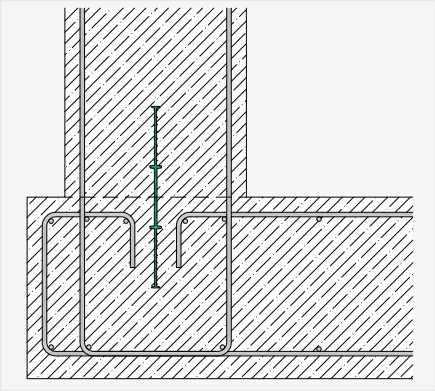

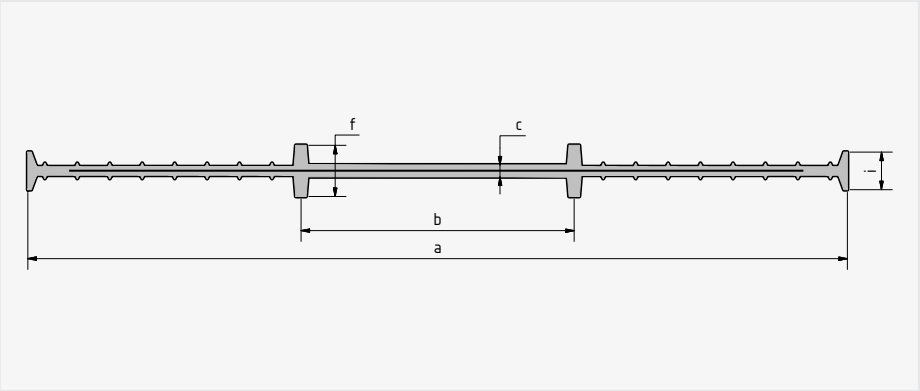

DIMENSIONS

Type company standard	a [mm]	f [mm]	b [mm]	c [mm]	i [mm]
A100S	100	15	40	3.5	11
A150S	150	15	58	3.5	11
A190S	190	15	78	4.0	11
A240S	240	15	85	4.0	11
A320S	320	15	100	4.5	11

Joint tapes up to 320 mm wide can, upon request, be delivered with fastening eyelets on one (o) or both sides (o2).
The distance between the eyelets is 200 mm. The fastening eyelets replace the joint tape clips which would otherwise be necessary to fasten the joint tapes.

Rod spacing:

100 mm (S) = 10x spring steel inserts/m (Type example: A190 S)
125 mm (SL) = 8x spring steel inserts/m (Type example: A190 SL)
150 mm (SL7) = 7x spring steel inserts/m (Type example: A190 SL7)
175 mm (SL6) = 6x spring steel inserts/m (Type example: A190 SL6)
200 mm (SL5) = 5x spring steel inserts/m (Type example: A190 SL5)

TECHNICAL INFORMATION

KUNEX® EXTERNAL CONSTRUCTION JOINT TAPE

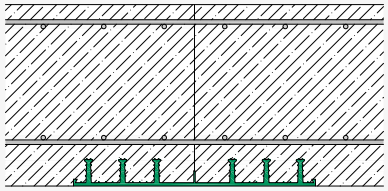

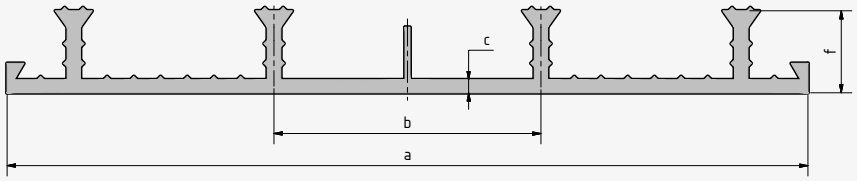

DIMENSIONS

Type DIN 18541	Type Company standard	a [mm]	f [mm]	b [mm]	c [mm]	Stop anchor [unit]
	AA190/17	190	17	80	3.7	4
AA240/20 DIN	AA240/20	240	20	80	4.0	4
AA240/25 DIN	AA240/25	240	25	80	4.0	4
AA240/35 DIN	AA240/35	240	35	84	4.0	4
	AA320/20	320	20	100	4.0	6
AA320/25 DIN	AA320/25	320	25	100	4.0	6
AA320/35 DIN	AA320/35	320	35	100	4.0	6
AA500/35 DIN	AA500/35	500	35	120	4.0	8

KUNEX® CORNER JOINT TAPE FOR CONSTRUCTION JOINTS

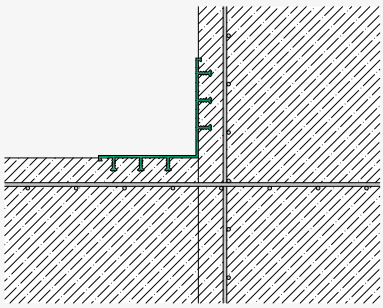

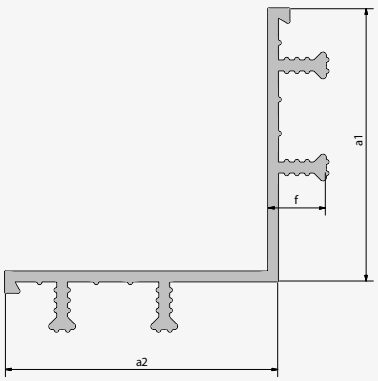

DIMENSIONS

Type DIN 18541-2	Type Company standard	a1 [mm]	a2 [mm]	f [mm]	Stop anchor [unit]
AA120/120 EA DIN	AA120/120 EA	120	120	25	4
AA165/165 EA DIN	AA165/165 EA	165	165	25	6

TECHNICAL INFORMATION

KUNEX® INTERNAL EXPANSION JOINT TAPE

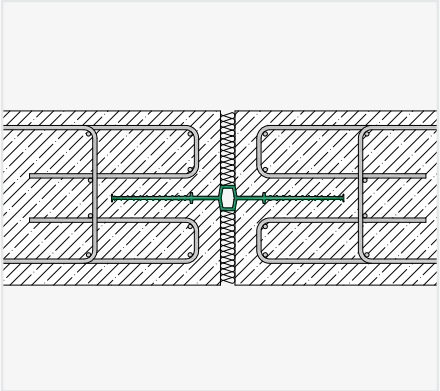

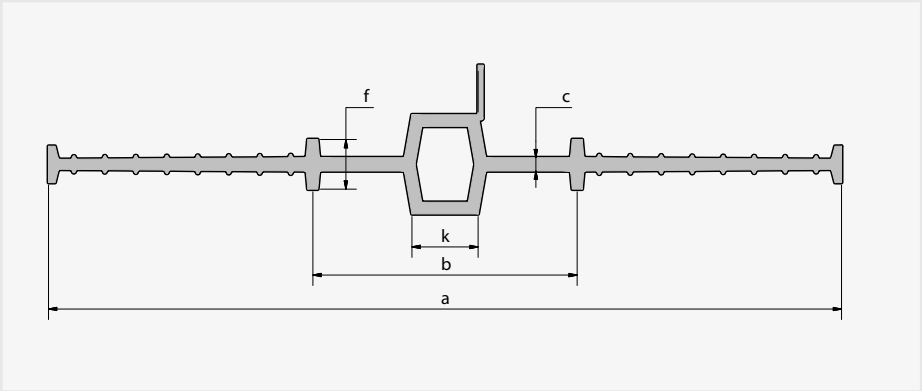

DIMENSIONS

Type DIN 18541	Type Company standard	a [mm]	k [mm]	f [mm]	b [mm]	c [mm]
	D150	150	10	15	55	3.5
	D190	190	10	15	70	3.5
D240 DIN	D240	240	20	15	80	4.0
D320 DIN	D320	320	20	15	100	5.0
D400 DIN	D400	400	20	16	125	5.2
D500 DIN	D500	500	20	20	150	6.0

Joint tapes up to 320 mm wide can, upon request, be delivered with fastening eyelets on one (o) or both sides (o2).
The eyelet spacing is 200 mm. The fastening eyelets replace the joint tape clips which would otherwise be necessary to fasten the joint tapes.

KUNEX® INTERNAL EXPANSION JOINT TAPE WITH INJECTION HOSE

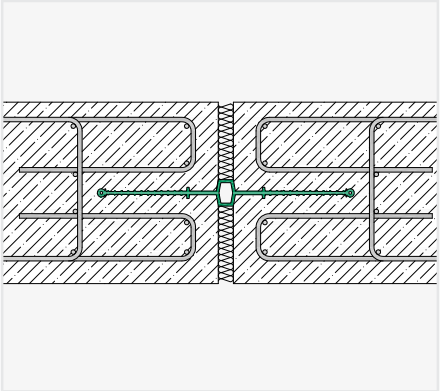

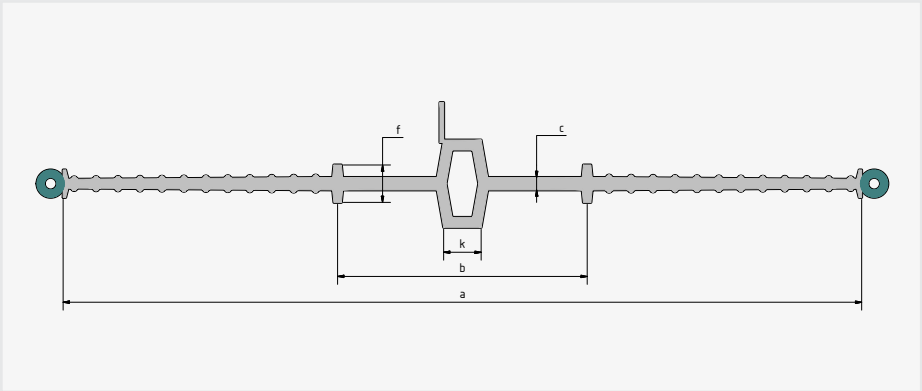

DIMENSIONS

Type DIN 18541-2	Type Company standard	a [mm]	k [mm]	f [mm]	b [mm]	c [mm]
D240 C11 DIN	D240 C11	240	20	15	80	4.0
D320 C11 DIN	D320 C11	320	20	15	100	5.0
D500 C11 DIN	D500 C11	500	20	20	150	6.0

Injection hose dimensions: 11 mm outer, 6 mm inner.

TECHNICAL INFORMATION

KUNEX® EXTERNAL EXPANSION JOINT TAPE

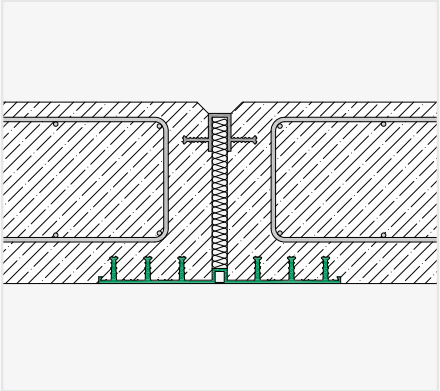

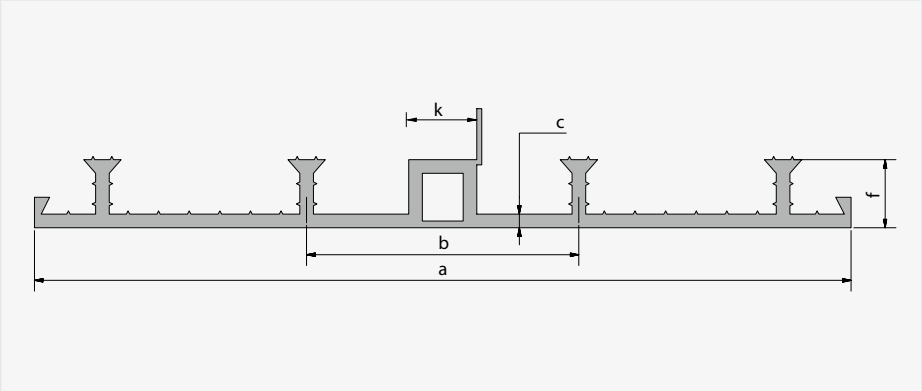

DIMENSIONS

Type DIN 18541	Type Company standard	a [mm]	k [mm]	f [mm]	b [mm]	c [mm]	Stop anchor [unit]
–	DA190/17	190	20	17	80	3.7	4
DA240/20 DIN	DA240/20	240	20	20	80	4.0	4
DA240/35 DIN	DA240/35	240	20	35	84	4.0	4
–	DA320/20	320	20	20	100	4.0	6
DA320/25 DIN	DA320/25	320	20	25	100	4.0	6
DA320/35 DIN	DA320/35	320	20	35	100	4.0	6
DA500/35 DIN	DA500/35	500	20	35	120	4.0	8

KUNEX® EXTERNAL EXPANSION JOINT TAPE WITH INJECTION HOSE

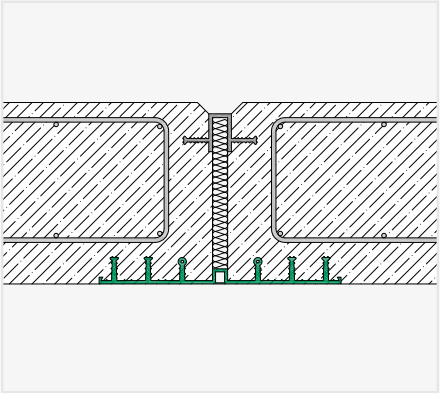

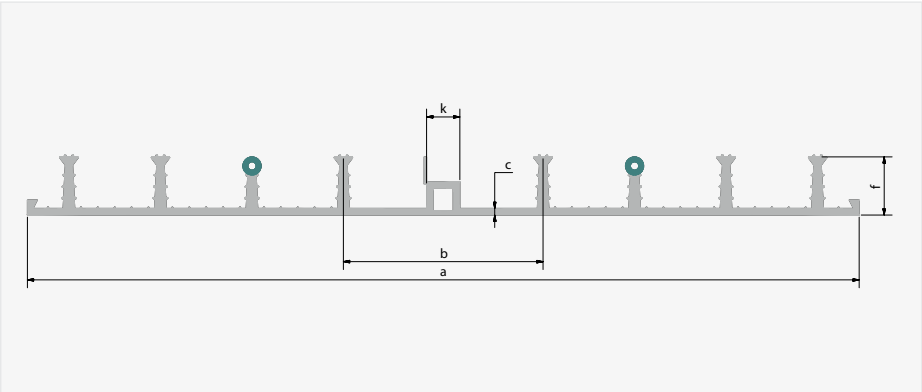

DIMENSIONS

Type DIN 18541-2	Type Company standard	a [mm]	k [mm]	f [mm]	b [mm]	c [mm]	Stop anchor [unit]
DA240/20 C11 DIN	DA240/20 C11	240	20	20	80	4.0	4
DA240/35 C11 DIN	DA240/35 C11	240	20	35	84	4.0	4
DA320/25 C11 DIN	DA320/25 C11	320	20	25	100	4.0	6
DA320/35 C11 DIN	DA320/35 C11	320	20	35	100	4.0	6
DA500/35 C11 DIN	DA500/35 C11	500	20	35	120	4.0	8

Injection hose dimensions: 11 mm outer, 6 mm inner. The number and position of the injection hoses can be altered.

TECHNICAL INFORMATION

KUNEX® CORNER JOINT TAPE FOR EXPANSION JOINTS

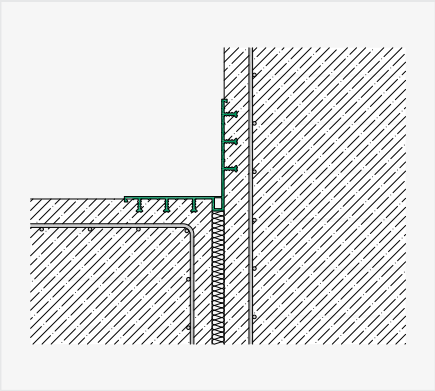

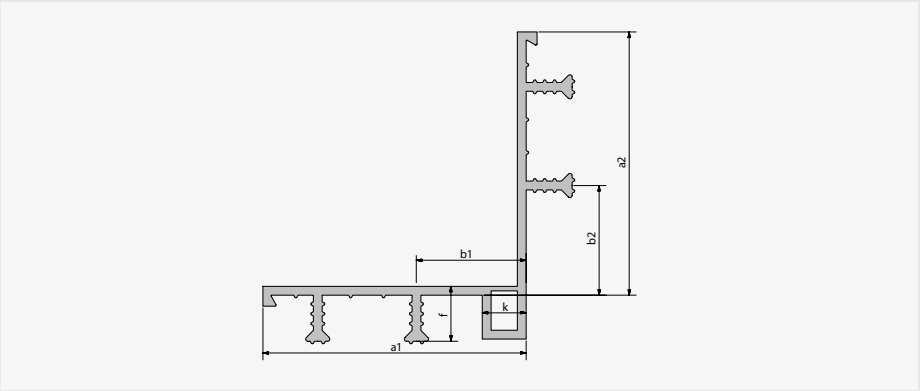

DIMENSIONS

Type DIN 18541-2	Type Company standard	a1/a2 [mm]	k [mm]	f [mm]	b1/b2 [mm]	Stop anchor [unit]
DA120/120 EA DIN	DA 120/120 EA	120/120	20	25	50/50	4
DA 165/165 EA DIN	DA 165/165 EA	165/165	20	25	50/50	6

TECHNICAL INFORMATION

KUNEX® JOINT CLOSING TAPE

KUNEX® grey PVC-P joint end tape for covering the surface of movement joints.

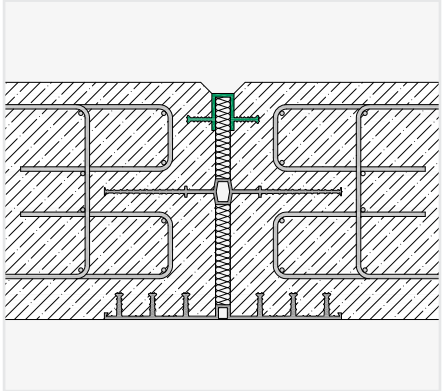

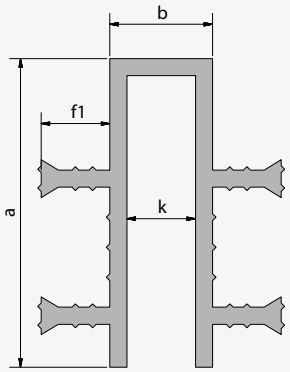

DIMENSIONS

Type DIN 18541	Type Company standard	a [mm]	f1 [mm]	b [mm]	k [mm]	Stop anchor [unit]
FA50/20 DIN	FA50/20	50	20	30	20	2
FA50/30 DIN	FA50/30	50	30	30	20	2
FA70/40 DIN	FA70/40	70	40	30	20	2
FA90/20 DIN	FA90/20	90	20	30	20	4
FA95/30 DIN	FA95/30	95	30	30	20	4
FA130/20 DIN	FA130/20	130	20	30	20	6

KUNEX® JOINT END STRIP

KUNEX® hard PVC joint end strip for use as a suitable fitting aid for joint end tapes.

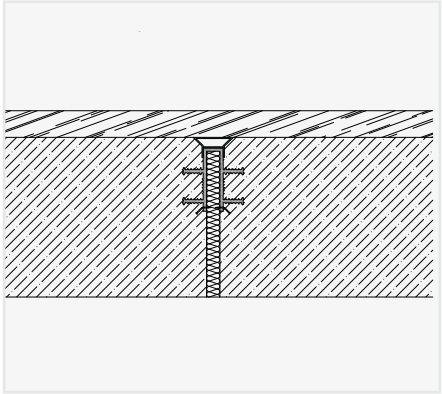

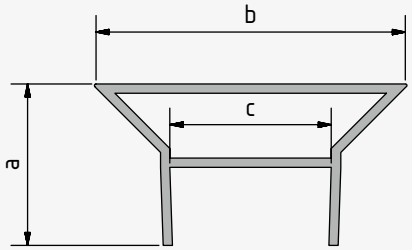

DIMENSIONS

Type	a [mm]	b [mm]	c [mm]	Length [m]
FL30/60	30	60	30	2.50

TECHNICAL INFORMATION

MATERIALS

TPE raw material in the following quality class:

- Company standard compatible with bitumen (BV)

COMPATIBILITY WITH BITUMEN

Joint tapes correspond as standard to the quality class BV (compatible with bitumen).

ADVANTAGES

- Joint tapes in accordance with company standard (with abP)
- Steel-reinforced joint tapes
- Joint tapes with eyelets
- Good welding properties
- Better properties than PVC
- PVC- and halogen-free
- Completely recyclable
- Excellent resistance (e.g. liquid manure, slurry, silage leachate) with examination report

TPE IN ACCORDANCE WITH COMPANY STANDARD

Joint tapes made of thermoplastic elastomer (TPE) combine the simple processing method of a plastic and the positive qualities of an elastomer, such as resistance, flexibility at low temperatures, yield point and tensile strength. TPE joint tapes are PVC-free and completely recyclable. The usability is governed in a general supervisory test certificate (abP), indicated by the compliance mark and monitored accordingly.

MATERIAL CHARACTERISTICS

Properties	TPE*
	Company standard
Tensile strength acc. to DIN EN ISO 527	≥ 11 N/mm²
Yield point acc. to DIN EN ISO 527	≥ 500%
Shore A hardness acc. to DIN 53505	74 ± 5
Fire properties acc. to DIN EN 13501	Normally flammable (material class E)
Temperature resistance	-40 to +80 °C

* NEW with abP

TRANSPORTATION AND STORAGE

TRANSPORTATION

The joint tape must be loaded and unloaded carefully and secured for transportation. It must be examined for damage and completeness on delivery. At high ambient temperatures, joint tapes must be transported with care and laid out flat at the installation site.

STORAGE IN WINTER

In winter, joint tapes made from TPE must be stored in closed rooms and on a solid, dry base (transport pallet) where possible. To allow easier installation and processing, we recommend interim storage in a heated room before use.

STORAGE IN SUMMER

It is important to store joint tapes in a cool and dry place in summer. In addition, joint tapes must be protected from direct sunlight (e.g. by covering them).

TECHNICAL INFORMATION

KUNEX® INTERNAL CONSTRUCTION JOINT TAPE

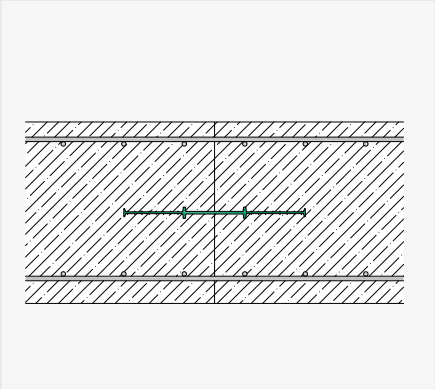

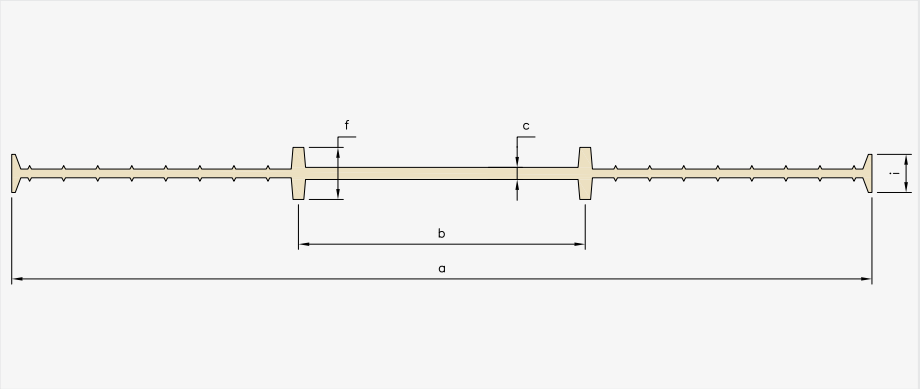

DIMENSIONS

Type Company standard	a [mm]	f [mm]	b [mm]	c [mm]	i [mm]
A240 TPE	240	14	80	3.5	11
A320 TPE	320	14	100	4.5	11
A500 TPE	500	20	150	6.0	11

Joint tapes up to 320 mm wide can, upon request, be delivered with fastening eyelets on one (o) or both sides (o2).
The eyelet spacing is 200 mm. The fastening eyelets replace the joint tape clips which would otherwise be necessary to fasten the joint tapes.

KUNEX® STEEL-REINFORCED CONSTRUCTION JOINT TAPE

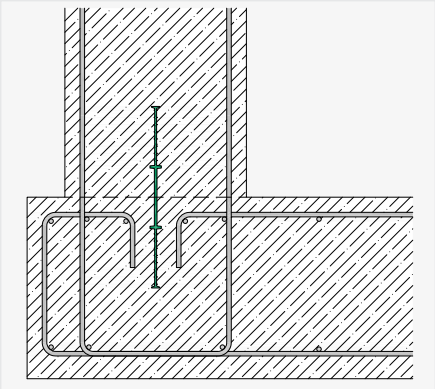

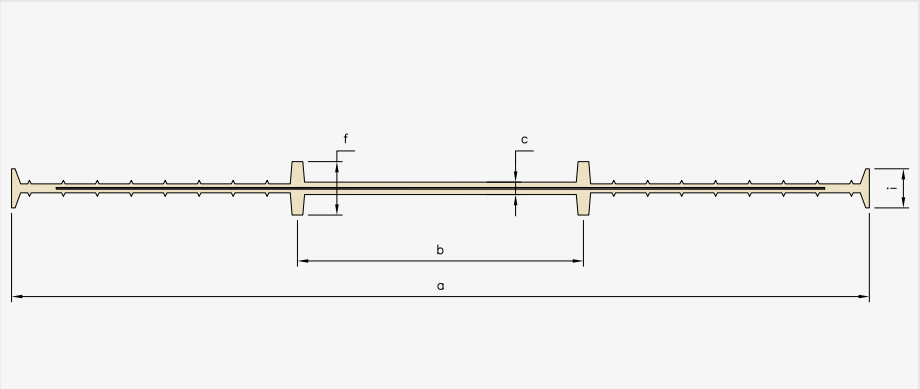

DIMENSIONS

Type company standard	a [mm]	f [mm]	b [mm]	c [mm]	i [mm]
A240SL7 TPE	240	15	85	4.0	11
A320SL7 TPE	320	15	100	4.0	11

Joint tapes up to 320 mm wide can, upon request, be delivered with fastening eyelets on one (o) or both sides (o2).
The distance between the eyelets is 200 mm. The fastening eyelets replace the joint tape clips which would otherwise be necessary to fasten the joint tapes.

Rod spacing:

150 mm (SL7) = 7x spring steel inserts/m (Type example: A240 SL7)

TECHNICAL INFORMATION

KUNEX® INTERNAL EXPANSION JOINT TAPE

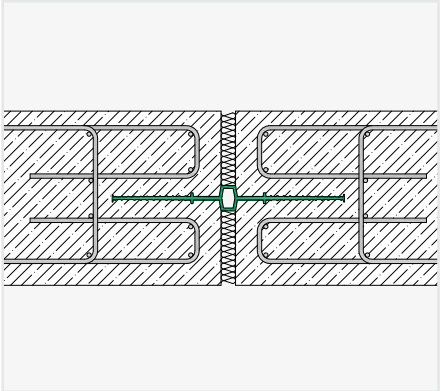

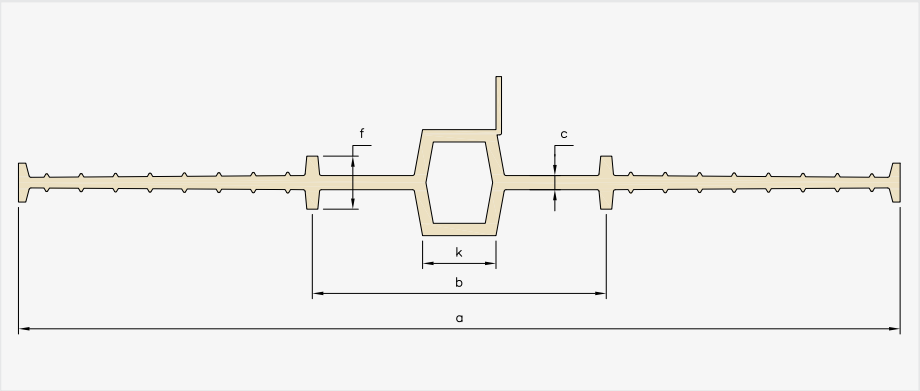

DIMENSIONS

Type Company standard	a [mm]	k [mm]	f [mm]	b [mm]	c [mm]
D240 TPE	240	20	15	80	4.0
D320 TPE	320	20	15	100	5.0
D500 TPE	500	20	20	150	6.0

Joint tapes up to 320 mm wide can, upon request, be delivered with fastening eyelets on one (o) or both sides (o2).
The eyelet spacing is 200 mm. The fastening eyelets replace the joint tape clips which would otherwise be necessary to fasten the joint tapes.

KUNEX® EXTERNAL EXPANSION JOINT TAPE

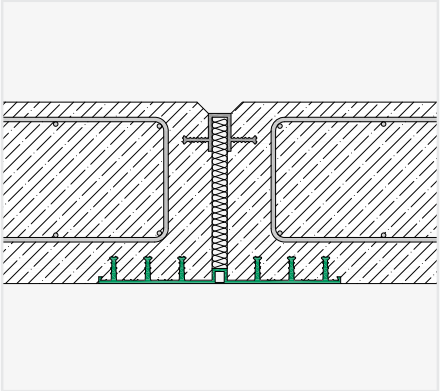

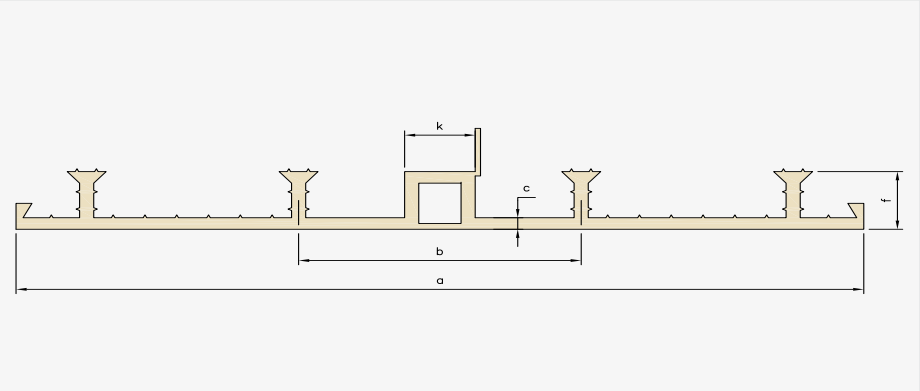

DIMENSIONS

Type Company standard	a [mm]	k [mm]	f [mm]	b [mm]	c [mm]	Stop anchor [unit]
DA240/20 TPE	240	20	20	80	4.0	4
DA240/35 TPE	240	20	35	84	4.0	4
DA320/25 TPE	320	20	25	100	4.0	6
DA320/35 TPE	320	20	35	100	4.0	6
DA500/35 TPE	500	20	35	120	4.0	8

INSTALLATION INSTRUCTIONS

INSTALLATION AND PROCESSING
BEFORE INSTALLATION

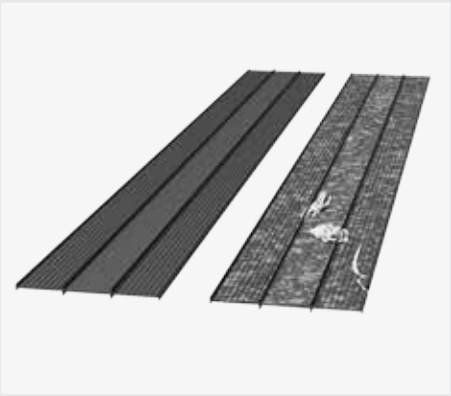

Joint tapes

- must be checked for damage, contamination and deformation.
- must be installed without folds or kinks.
- must only be processed when the material temperature is > 0 °C.
- must be checked to ensure that they are free from ice when concreting.

FASTENING

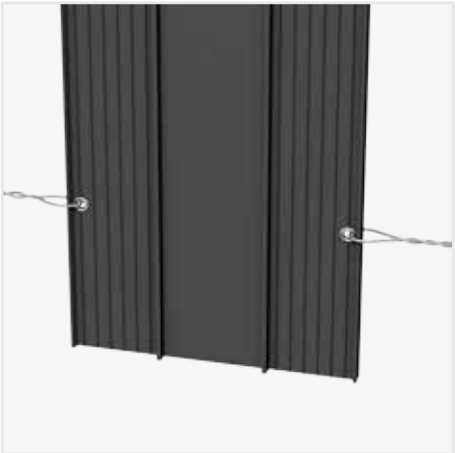

Fastening with eyelets or clips. The maximum spacing should not exceed 250 mm.

INSTALLATION INSTRUCTIONS

POSITIONING STABILITY

Floor-floor construction joint: Shuttering with ABS-R for coarse joints.

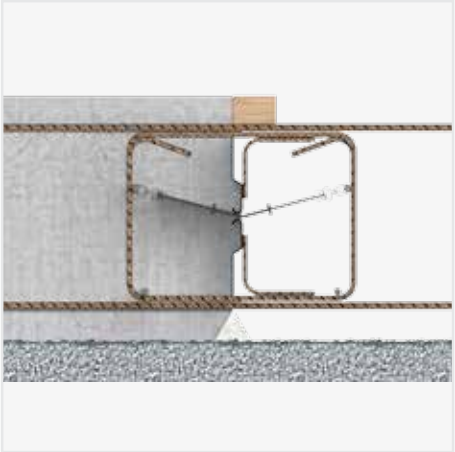

Floor-floor construction joint: Shuttering with ABS-V for interlocking joints.

Floor-wall construction joint: Attachment to the reinforcement.

Wall-wall construction joint: Attachment to the formwork.

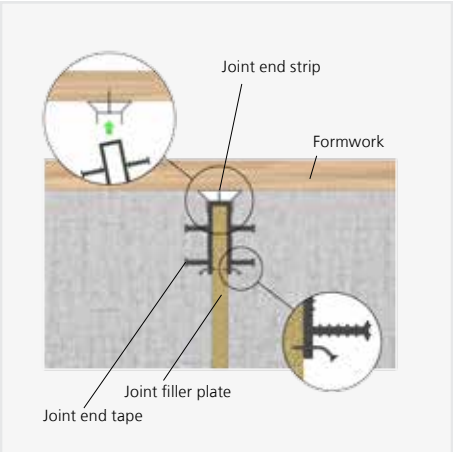

Wall-wall expansion joint: Attachment of the joint end tape to the formwork using the joint end strip.

Bend horizontal joints into a V shape at an angle of ~15°. Only use nails in the outer edge area of the joint tapes.

INSTALLATION INSTRUCTIONS

BASE PLATE-WALL CONNECTION

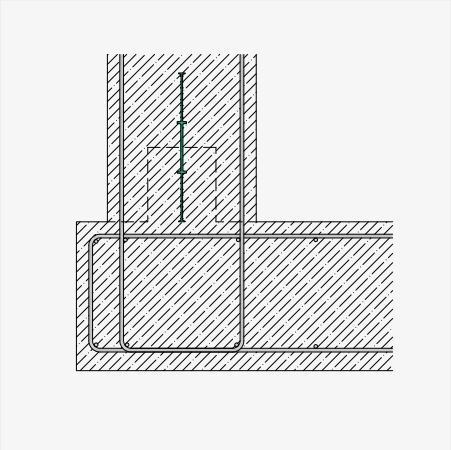

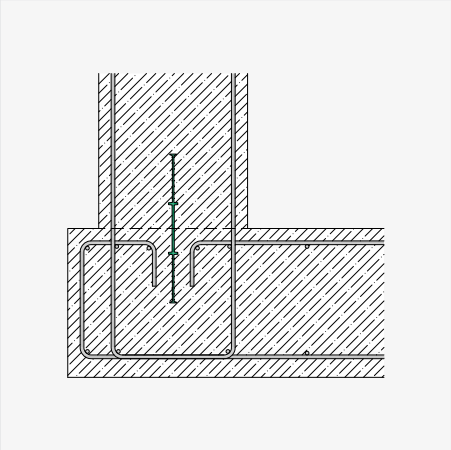

Version with concrete upstand or without upstand for corresponding reinforcement layout.

DISTANCE TO REINFORCEMENT

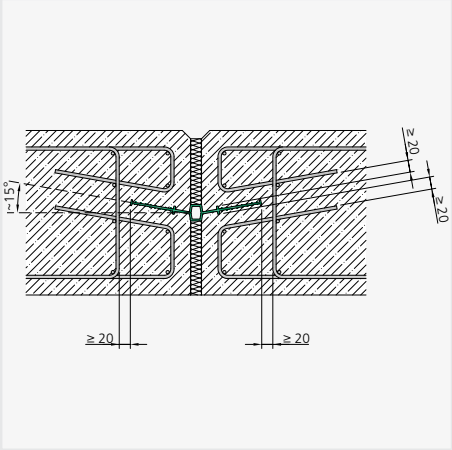

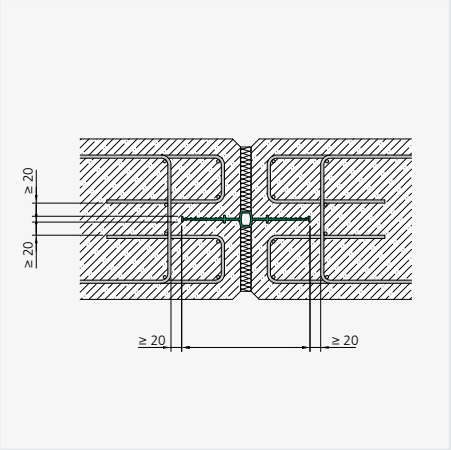

The distance between the joint tape and the reinforcement must be at least 20 mm.

CONCRETE COVER AND ANCHORING DEPTH

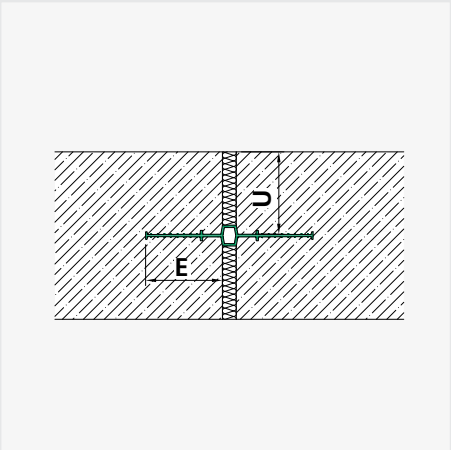

Internal joint tapes should be positioned centrally in the component, roughly corresponding to the component thickness. The anchoring depth (E) should not exceed the cover (U).

The minimum component thicknesses in accordance with the watertight structure guidelines must be complied with.

INSTALLATION INSTRUCTIONS

CONCRETING

REMOVAL

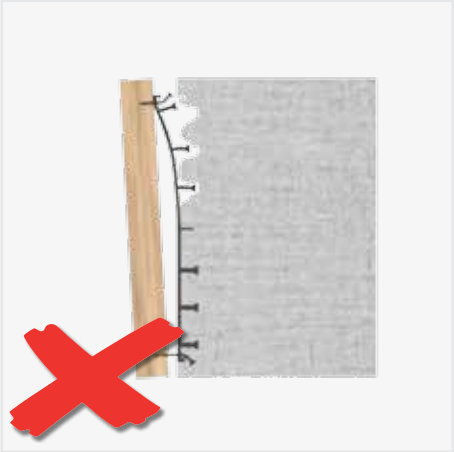

INSTALLATION INSTRUCTIONS

STORAGE

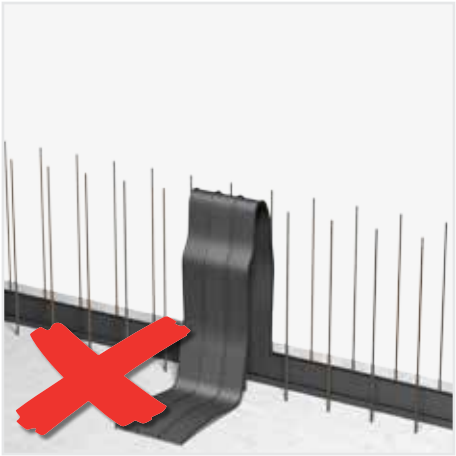

INSPECTION AND DOCUMENTATION

INSPECTION

After shuttering, the visible areas of the joint tapes must be checked for damage. Any defects found must be rectified immediately.

DOCUMENTATION

The handling, processing and installation of the joint tapes on the construction site must be monitored and documented in line with the specific quality assurance procedures applicable to the property. Our CAD drawings of the joint band systems as well as the test report for joints at the building site in DIN 18197 can be used as a basis for this.

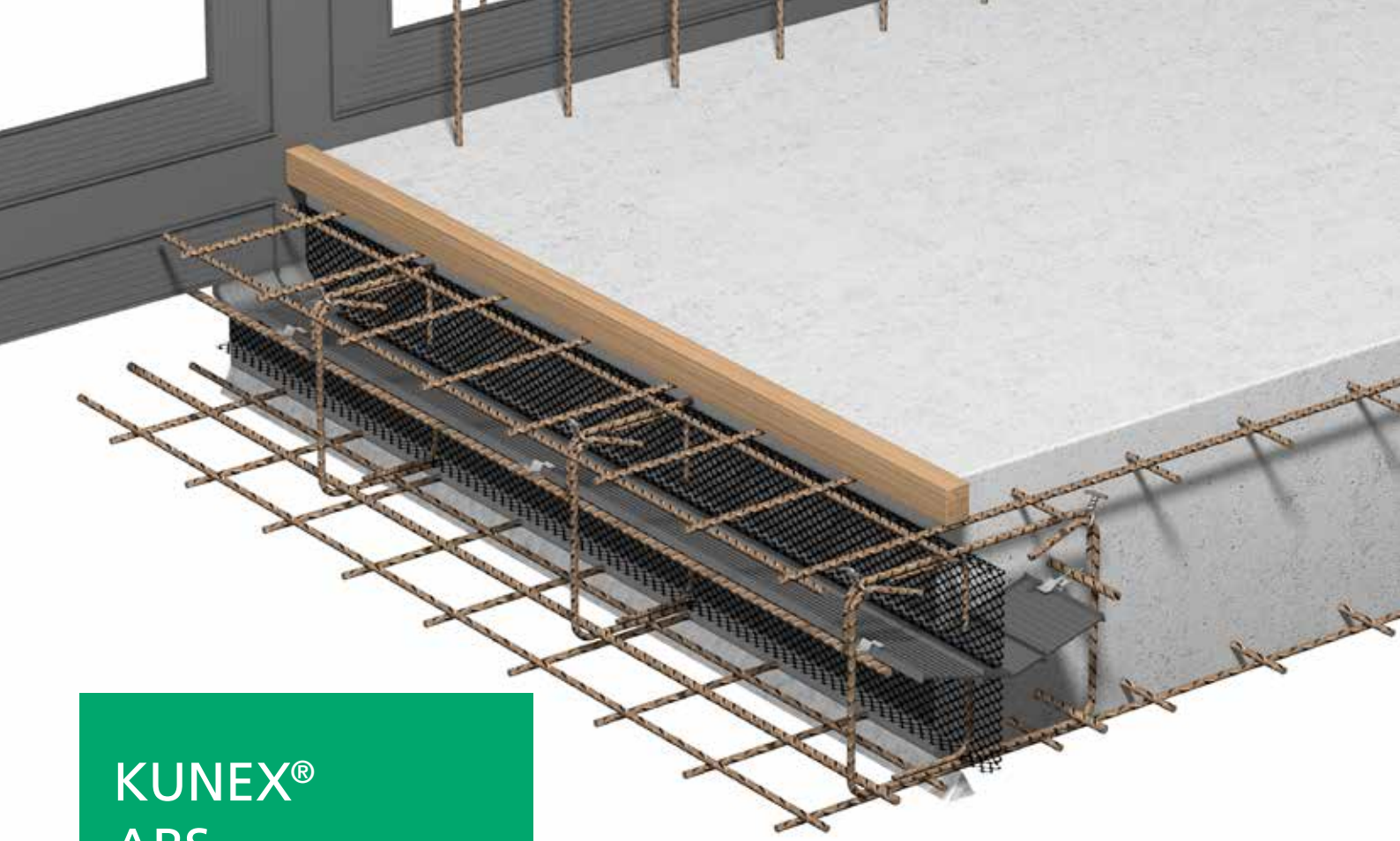

KUNEX® ABS

SHUTTERING ELEMENT FOR INTERNAL CONSTRUCTION JOINT TAPES

THE PRODUCT

The KUNEX® shuttering element is a combination of construction joint tape and profiled formwork. The joint is reliably sealed by the joint tape. The shuttering is created using dimensionally stable metal mesh elements, which are reinforced using a special stirrup construction. The ABS element can be supplied as a coarse or interlocking joint (ABS-R, ABS-V).

ADVANTAGES

- High shear strength in the bonding joint
- For continuous reinforcement
- Two-part cage for quick joint tape installation
- Distance to reinforcement in accordance with DIN

APPLICATION AREA

KUNEX® ABS provides shuttering for construction joints in reinforced concrete components that are exposed to water (floors, walls and ceilings), particularly for applications that require bonding joints with a high shear strength.

TECHNICAL INFORMATION

BASIC INFORMATION

- KUNEX® A240/A320 joint tape
- Standard length of shuttering element: l = 2.40 m
- Fixed lengths possible
- Installation dimension: E ≥ 150 mm
- Special forms are possible

SYSTEM SECTION

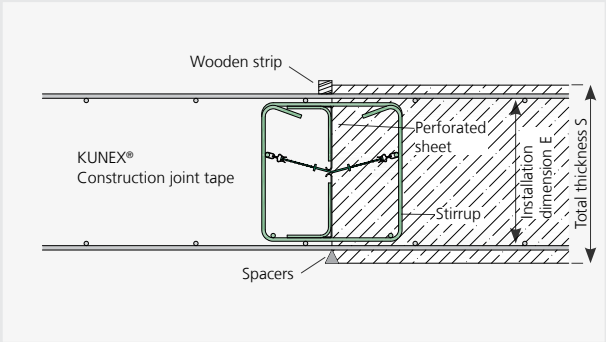

VERSIONS

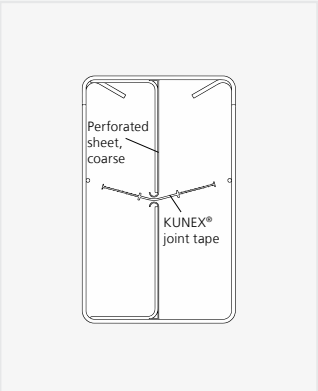

KUNEX® ABS-R floor/floor (ceiling/ceiling) coarse joint.

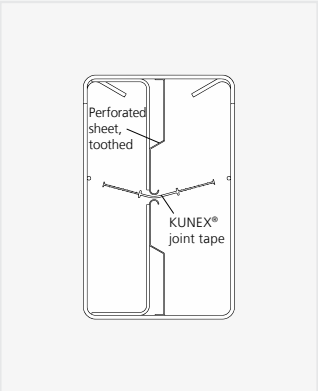

KUNEX® ABS-V floor/floor (ceiling/ceiling) interlocking joint in accordance with EC2.

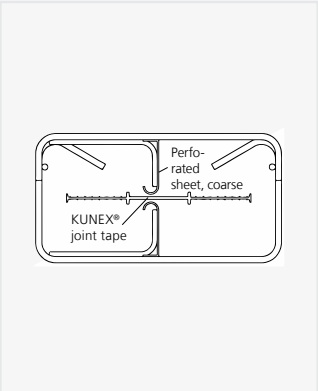

KUNEX® ABS-R wall/wall, coarse joint.

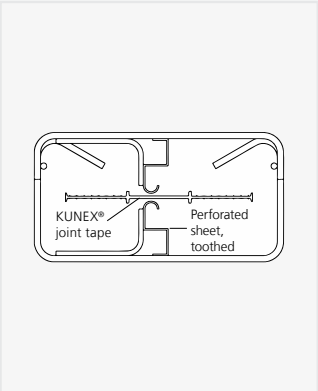

KUNEX® ABS-V wall/wall, interlocking joint in accordance with EC2.

INSTALLATION INSTRUCTIONS
(FLOOR/FLOOR, CEILING/CEILING)

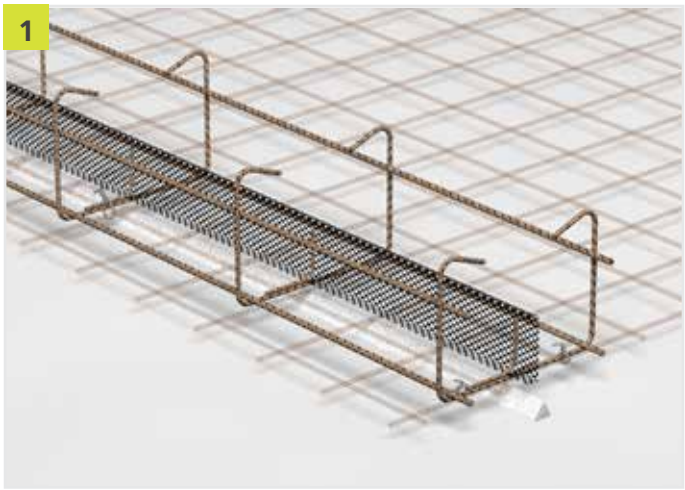

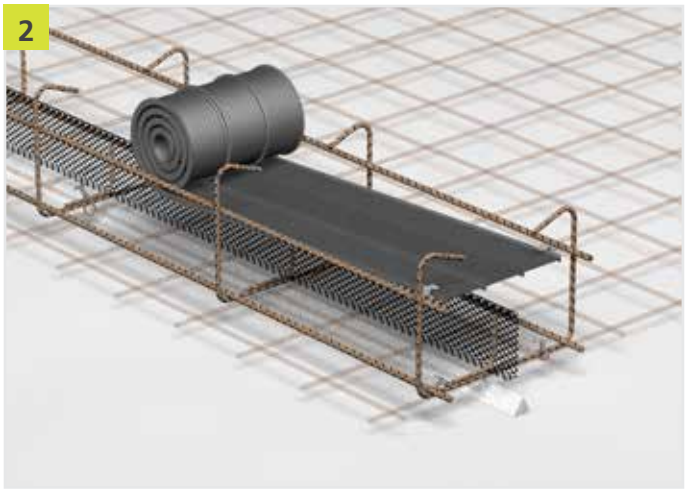

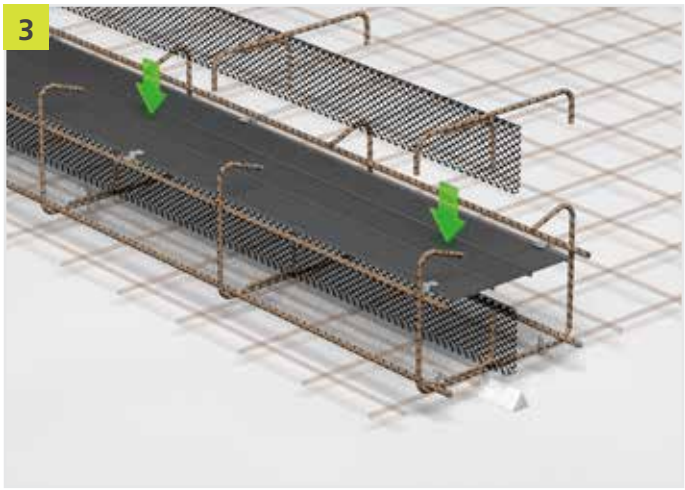

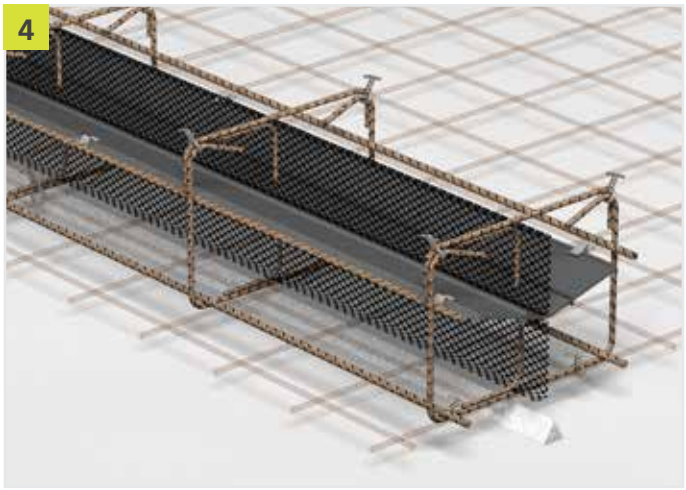

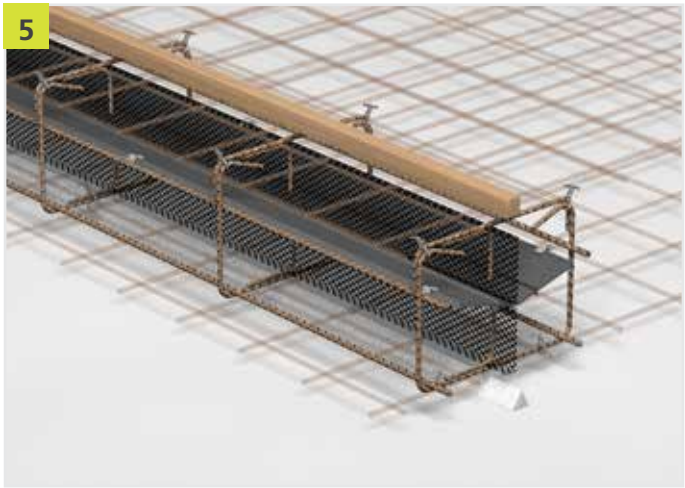

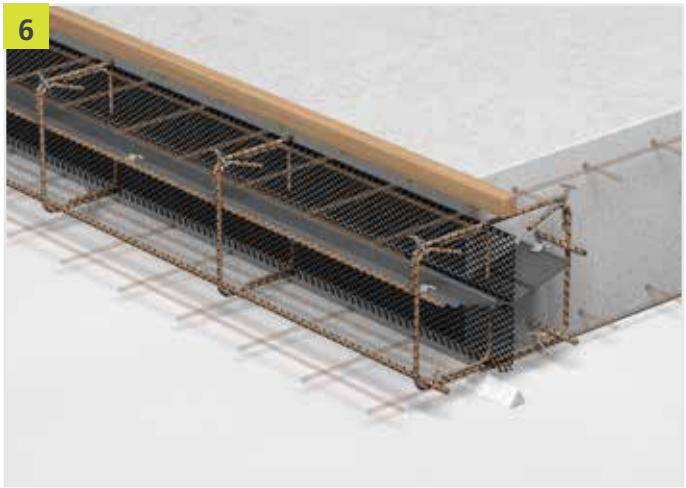

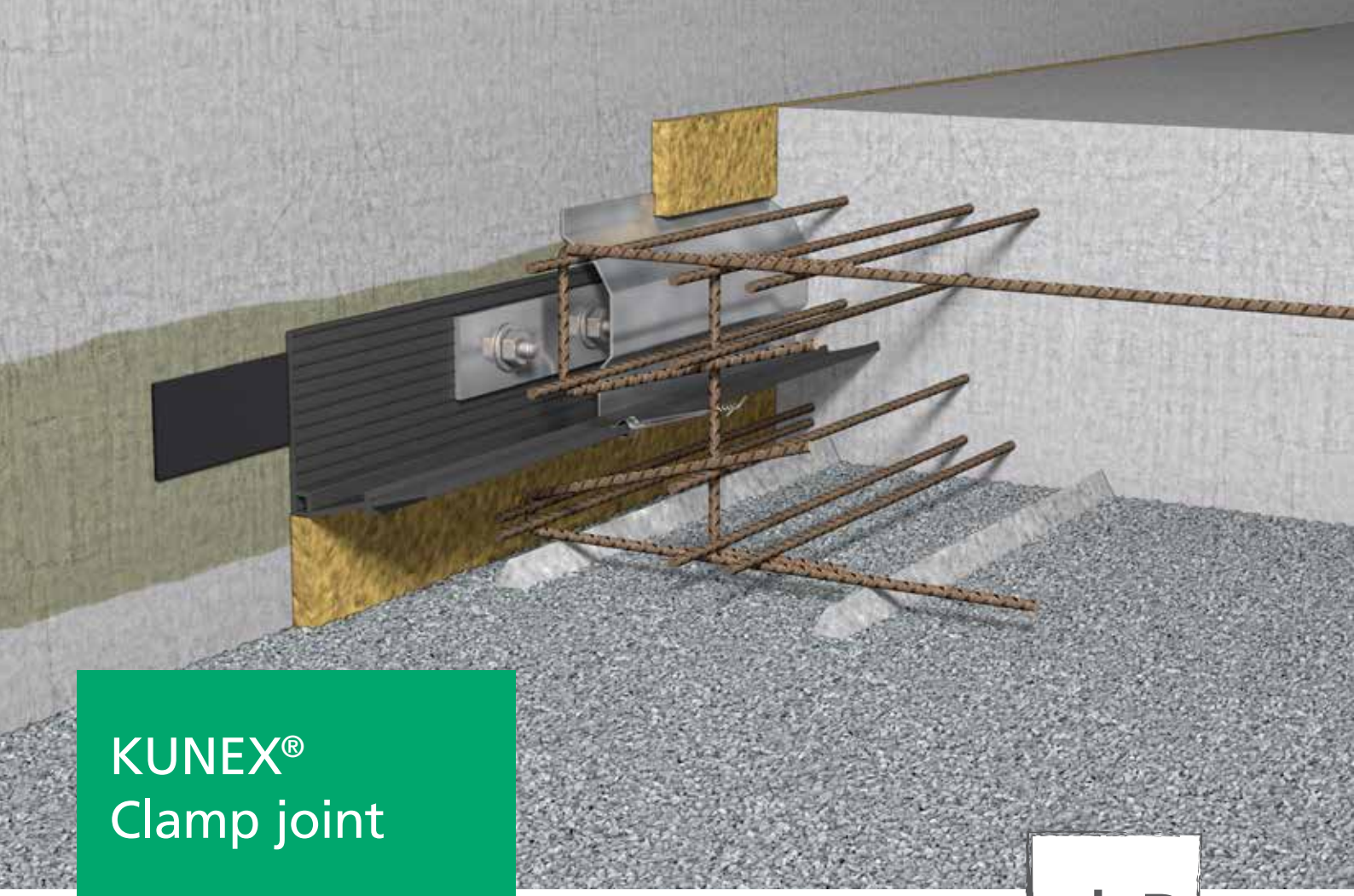

KUNEX® Clamp joint

COMPONENT CONNECTION BETWEEN NEW BUILDING AND EXISTING STOCK

THE PRODUCT

KUNEX® clamp joints are the ideal solution to the complex problems posed by a "new to old" building joint. The system consists of a primer, joint tapes according to DIN 18541-2, steel profiles, anchors and a crude rubber strip. The function of the clamp joint is based on pressing the joint tape onto the existing stock using clamp profiles, as well as integrating the joint tape into the newly concreted components.

ADVANTAGES

- Tested system solution with abP*
- Components from a single source
- Very good joint tape welding properties
- Clamp joint in accordance with customer requirements

THE APPLICATION

The KUNEX® clamp joints are intended for use when forming water-impervious movement joints on building connections. The joint width of the movement joint may be up to 30 mm, and the resulting deformation (vr) may be up to 20 mm. The system is suitable for water exchange zones and meets the requirements of usage class A for stress classes 1 and 2 in accordance with the watertight structure guidelines.

*Tested up to 2.5 bar; 0.5 bar permitted in accordance with the abP (safety factor of 5.0).

TECHNICAL INFORMATION

KUNEX® INTERNAL CLAMP JOINT TAPE

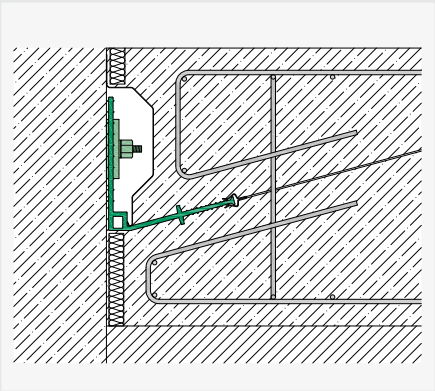

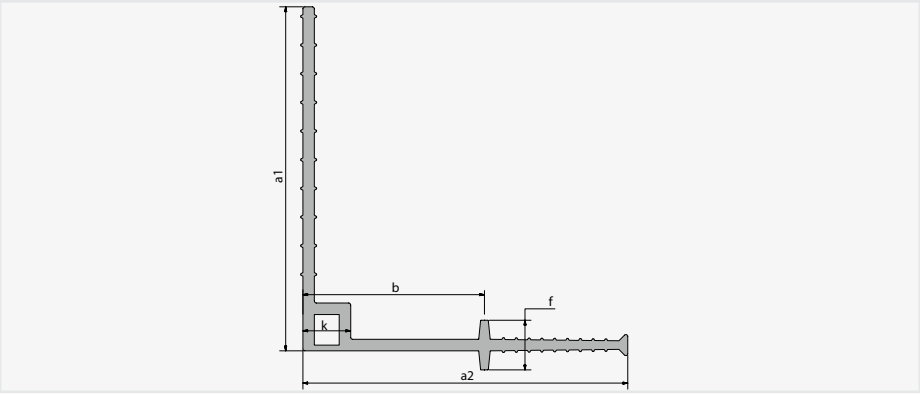

DIMENSIONS

Type DIN 18541-2	a1/a2 [mm]	k [mm]	f [mm]	b [mm]
D 180/170K DIN	180/170	20	26	95

KUNEX® EXTERNAL CLAMP JOINT TAPE

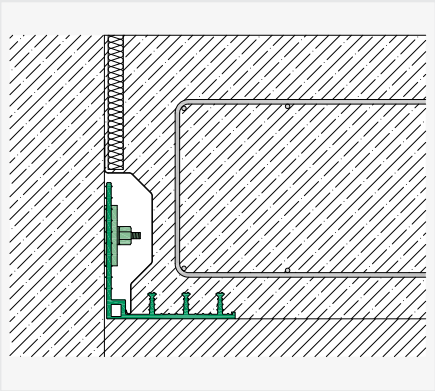

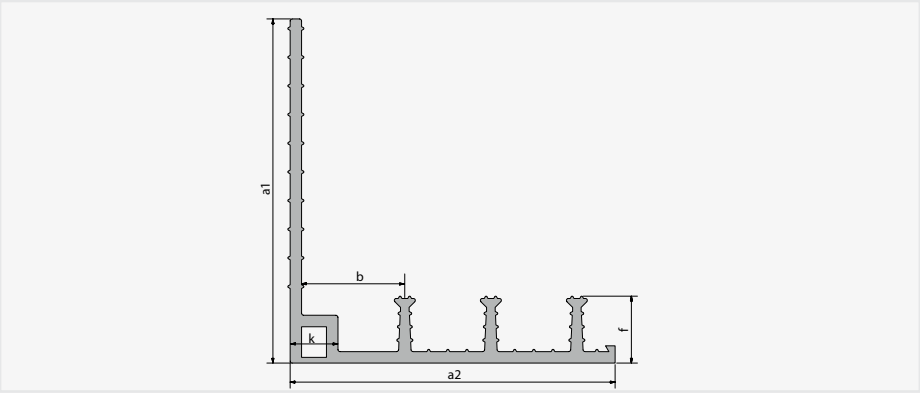

DIMENSIONS

Type DIN 18541-2	a1/a2 [mm]	k [mm]	f [mm]	b [mm]	Stop anchor [unit]
DA 180/170K DIN	180/170	20	35	60	3

INSTALLATION INSTRUCTIONS

PRELIMINARY NOTES

The surface of the existing stock must be in the following condition:

- ≥ 25 cm wide
- Clean, smooth, level and free from waves and recesses
- Free from cavities, cracks and loose parts
- Water-impervious
- Capable of bearing loads, surface tensile strength min. 1.5 N/mm², concrete quality ≥ C25/30 (previously: B25 water-impervious)

INSTALLATION INSTRUCTIONS

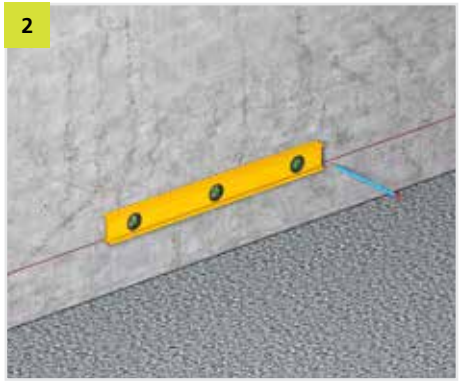

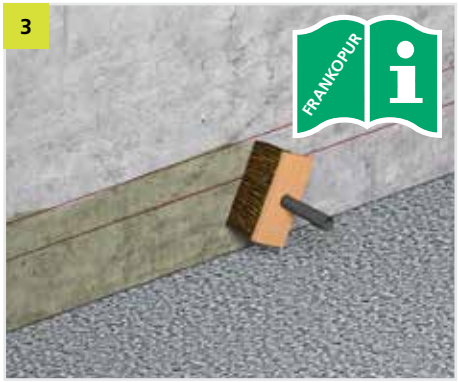

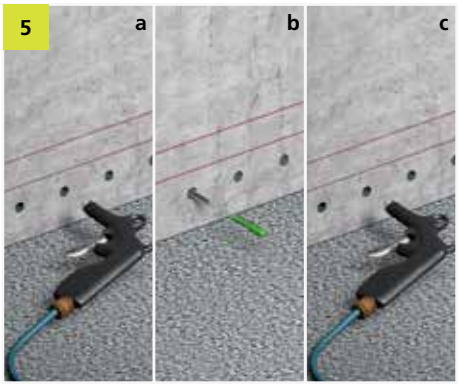

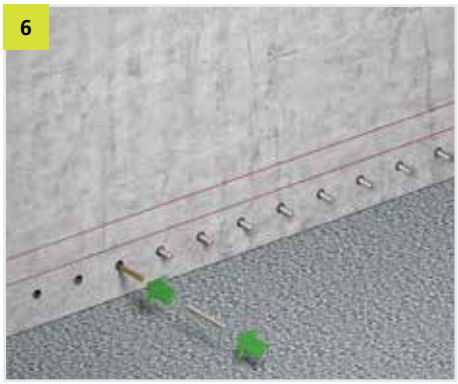

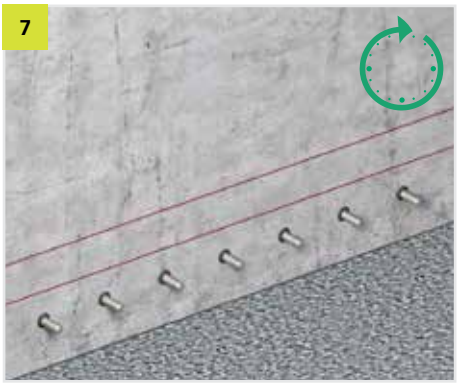

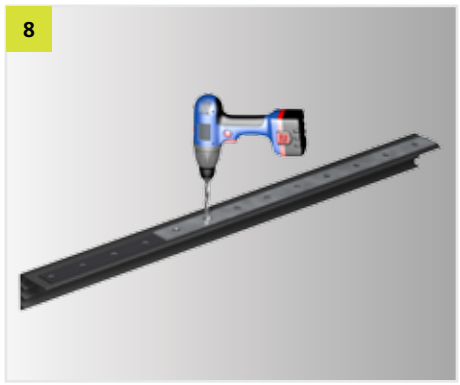

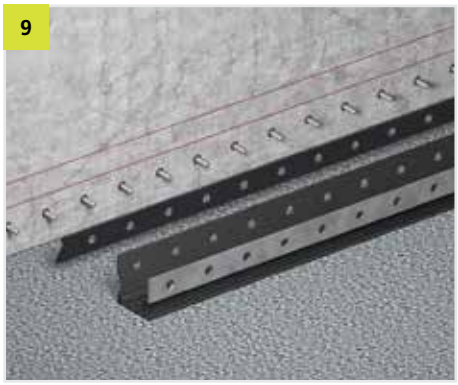

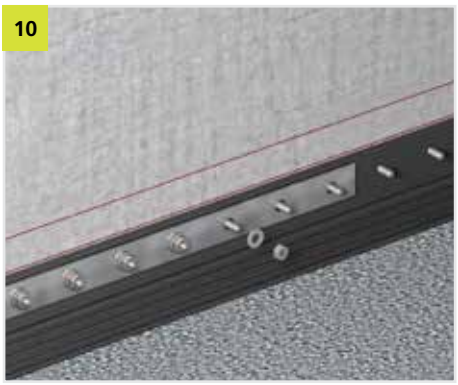

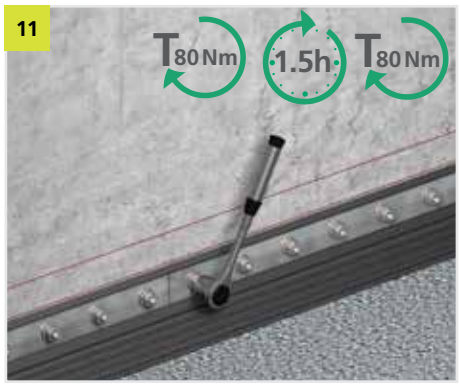

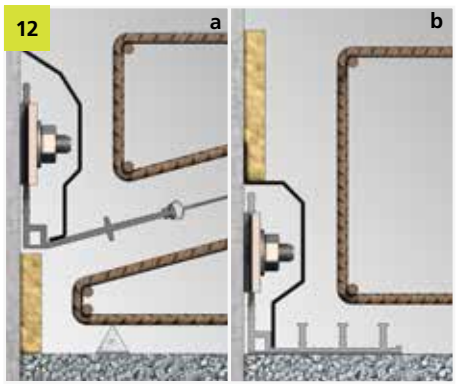

ACCESSORIES

PRIMER

For preparing the concrete surface.*

SHEAR CONNECTOR

Type: M12, M16*, M20.
For glueing the anchor rod in.

ANCHOR ROD

Type: M12/160, M16/190*, M20/230.
Galvanised or V4A incl. nut and U-washer.

CONCRETE BOLT

Type: TSM 14M16* galvanised or TS-M10M12* V4A incl. nut and U-washer.
Alternative fastening option to the shear connector system.

CRUDE RUBBER STRIP

Type: 80 x 4*, 100 x 4*.
Adhesive on one side for sealing the building connection joint.

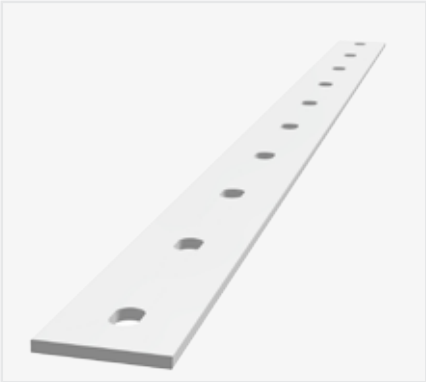

CLAMPING RAIL

Type: 80 x 8* (16/30, 20/30*), 100 x 10 (24/38). With slotted hole every 150 mm, galvanised (l = 1450 mm) or V4A (l = 1300 mm).

EXTERNAL CORNER

Special profile, 80 x 10 x 200 mm.
Galvanised or V4A.

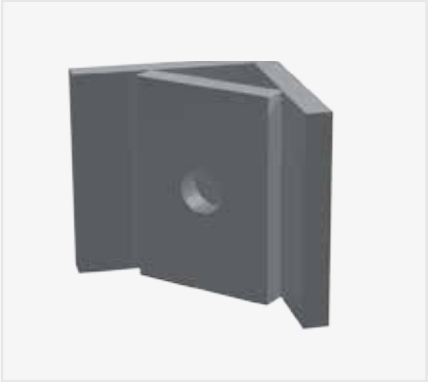

INNER CORNER

Special profile, 80 x 10 x 100 mm.
Galvanised or V4A.

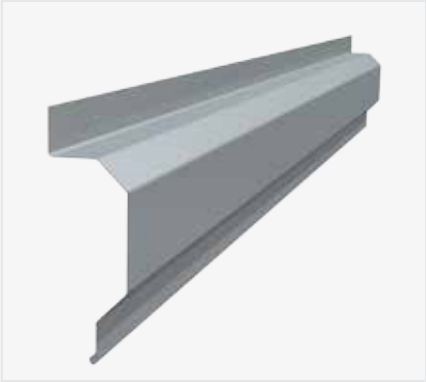

CLAMPING PROTECTION PROFILE

Made of galvanised sheet metal, incl. knock-in anchors. Ensures the joint can move and protects the structure.

* A version of the KUNEX® clamp joint in accordance with general supervisory test certificate P-5316/053/14 MPA-BS requires the components followed by an asterisk to be used.

SERVICE

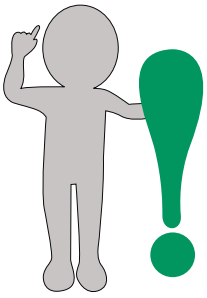

You can now download order forms from our homepage **www.h-bau.en/downloads** for better planning and implementation.

You can use this order form to simply and conveniently enter your order on the screen, save it and send it to us by e-mail, fax or post. We would also be happy to accept your enquiries and orders by phone.

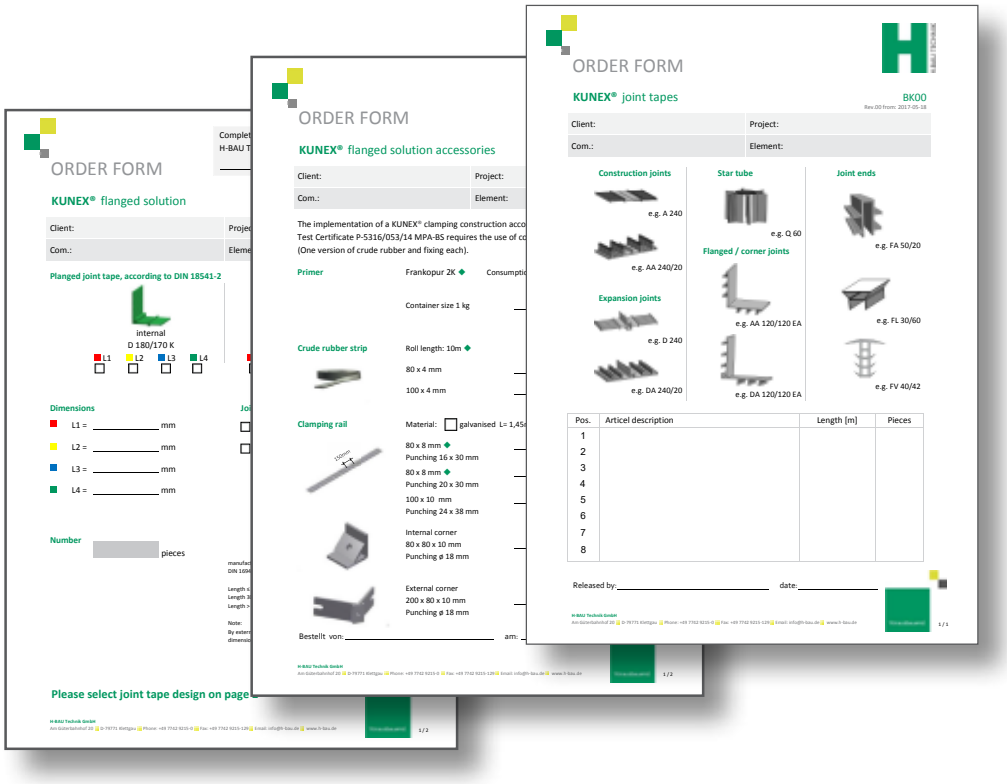

Our Applications Technology department would be pleased to assist in finding further solutions.
Phone: +49 (0) 7742 9215-300
Fax: +49 (0) 7742 9215-319
E-mail: technik@h-bau.de

Example illustrations

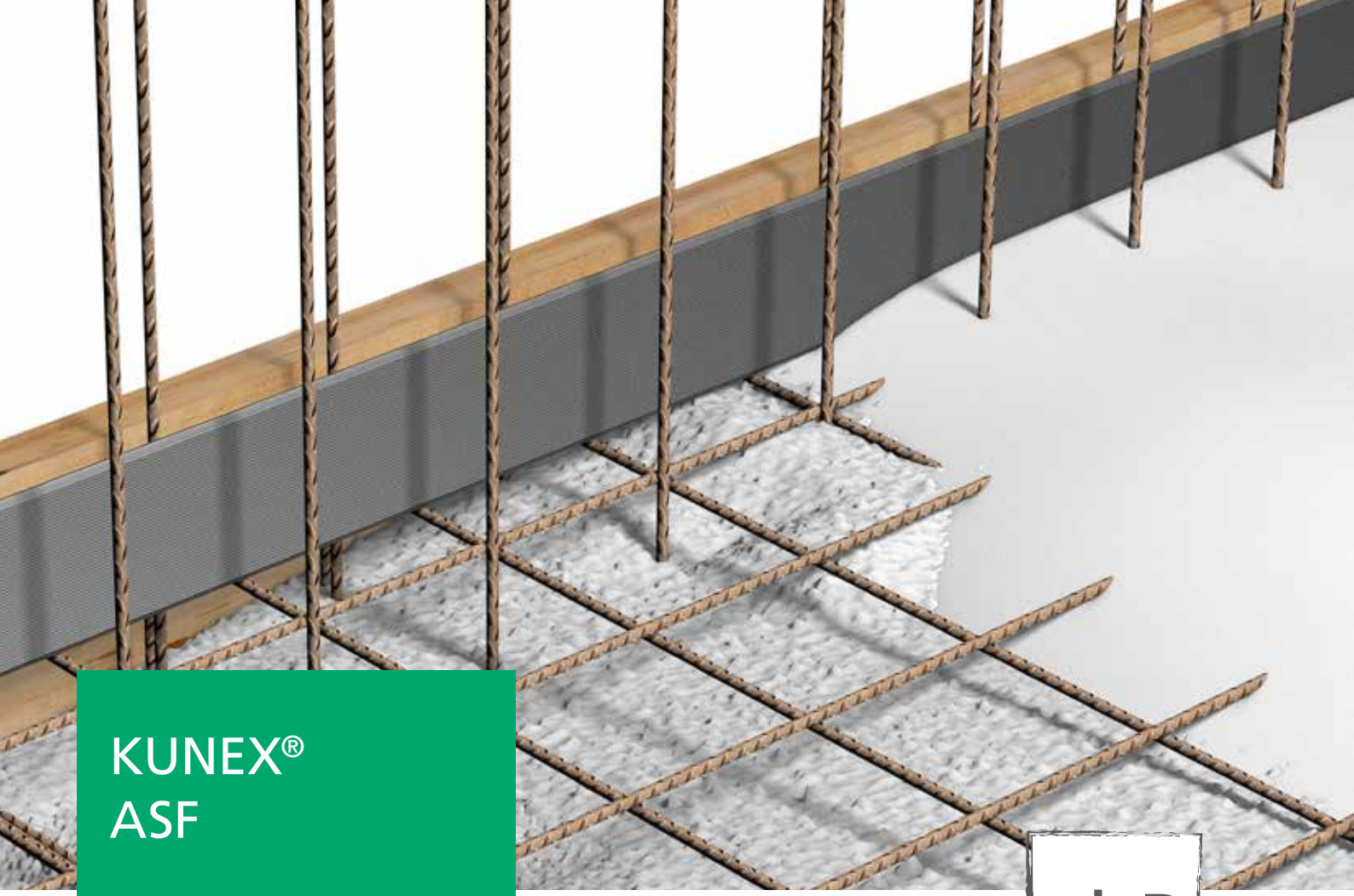

KUNEX® ASF

FOR CONSTRUCTION JOINTS SUBJECT TO MINOR LOADS

abP

THE PRODUCT

KUNEX® ASF thermoplastic joint tapes are used to seal construction joints that are subject to minor loads. Thanks to the special profile design, an excellent sealing effect is achieved at an anchoring depth of just 30 mm.

ADVANTAGES

- With general supervisory test certificate (abP)*
- Anchoring depth is just 30 mm
- Very good joint tape welding properties

THE APPLICATION

KUNEX® ASF joint tapes are used as internal joint seals for forming water-impervious construction joints. The system is suitable for water exchange zones and meets the requirements of usage class A for stress classes 1 and 2 in accordance with the watertight structure guidelines.

*Tested up to 1.0 bar; 0.4 bar permitted in accordance with the abP (safety factor of 2.5).

TECHNICAL INFORMATION

KUNEX® ASF

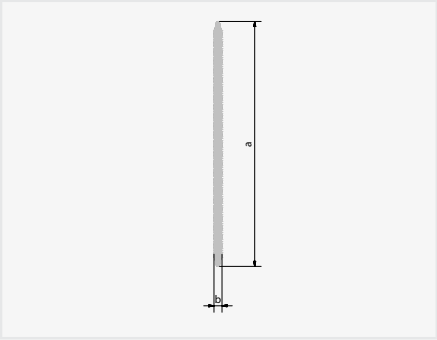

*Example illustration

- **Type ASF 80/5** a = 80 mm, b = 5 mm
- **Type ASF 100/5** a = 100 mm, b = 5 mm
- **Type ASF 120/4** a = 120 mm, b = 4 mm
- **Type ASF 120/6** a = 120 mm, b = 6 mm
- **Type ASF 150/5*** a = 150 mm, b = 5 mm

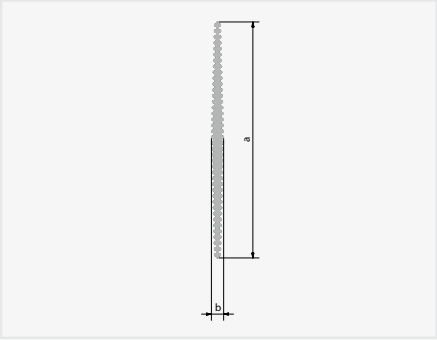

- **Type ASF 120/8** a = 120 mm, b = 8 mm

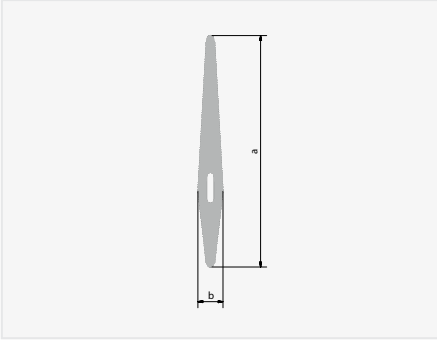

- **Type ASF 120/12** a = 120 mm, b = 12 mm

MATERIAL CHARACTERISTICS

Properties	Tensile strength in accodance with DIN EN ISO 527	Yield point in accordance with DIN EN ISO 527	Shore A hardness in accordance with DIN 53505	Fire properties in accordance with DIN EN 13501	Temperature resistance
PVC-P company standard	≥ 8 N/mm²	≥ 150%	≥ 89 ± 7	Normally flammable (material class E)	-20 to +60 °C

INSTALLATION INSTRUCTIONS

- Before use, check joint tapes for possible damage or deformation
- The ASF joint tape must be free from dirt and ice
- Roll out the joint tape and lay it on the upper layer of reinforcement without tensioning it 1
- The tape is usually installed in the middle of the construction joint 1
- Corner shapes are bent with a ≥ 150 mm bending radius 2
- Butt joints are connected by butt joint welding
- Movement or floating must be prevented during concreting 1 + 2
- The joint tape must be embedded without any cavities
- The anchoring depth is ≥ 30 mm

1

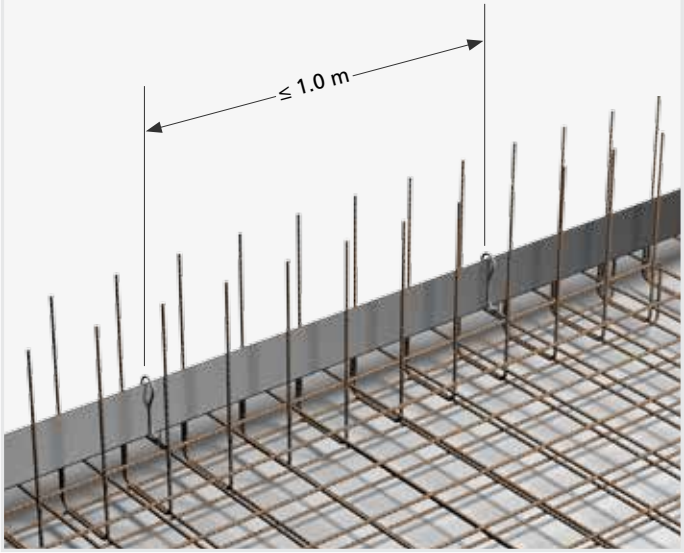

2

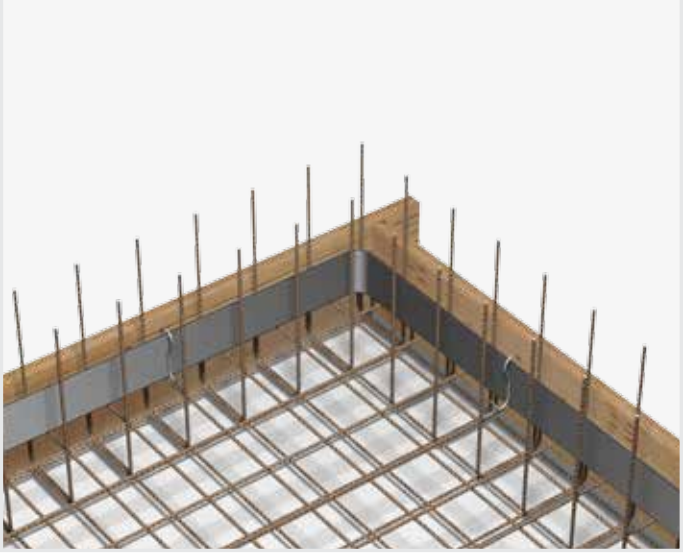

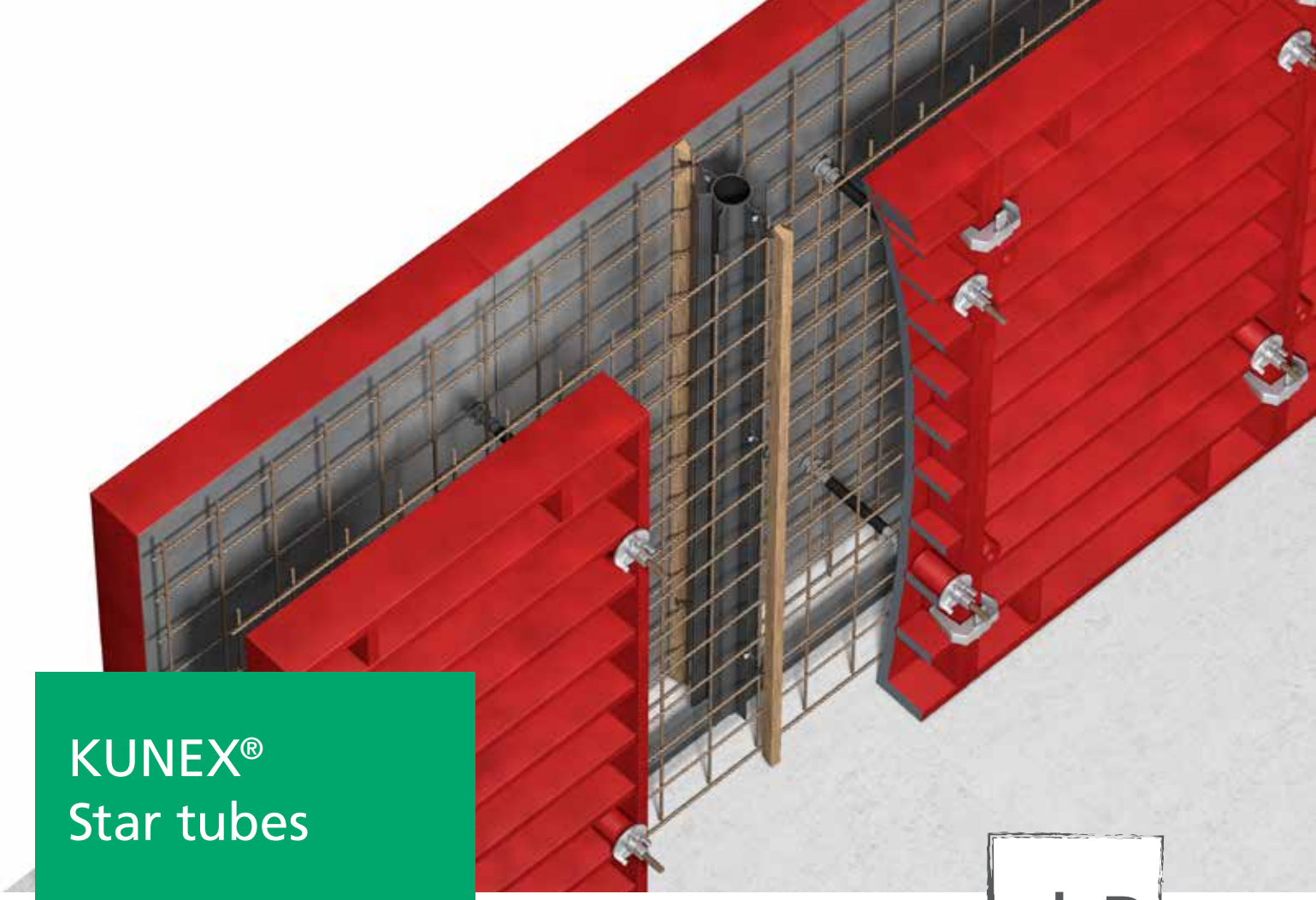

KUNEX® Star tubes

FOR SEALING CRACK CONTROL JOINTS IN CONCRETE

abP

THE PRODUCT

KUNEX® thermoplastic (PVC-P) star tubes are used to seal dummy joints and crack control joints in concrete.
Star tubes consist of a soft PVC casing with four stop anchors and two crack formation lips. The casing is stabilised by the hard PVC inner tube.
The two crack formation lips are used to form the crack at a predetermined point, which is simultaneously sealed again by the four stop anchors.

ADVANTAGES

- With general supervisory test certificate (abP)*
- Raw material PVC-P
- PVC-U inner tube for stabilisation
- Star tube also available with cutout and eyelets
- Can be used with KUNEX® joint tapes and PENTAFLEX KB® seam sheets in accordance with the abP

THE APPLICATION

KUNEX® star tubes are used as internal seals for forming dummy joints and crack control joints.
The system is suitable for water exchange zones and meets the requirements of usage class A for stress classes 1 and 2 in accordance with the watertight structure guidelines.

*Tested up to 5.0 bar; 2.0 bar permitted in accordance with the abP (safety factor of 2.5).

TECHNICAL INFORMATION

KUNEX® STAR TUBES

KUNEX® star tube made of a soft PVC casing with four stop anchors and a hard PVC inner tube in the "dust grey"-coloured version.

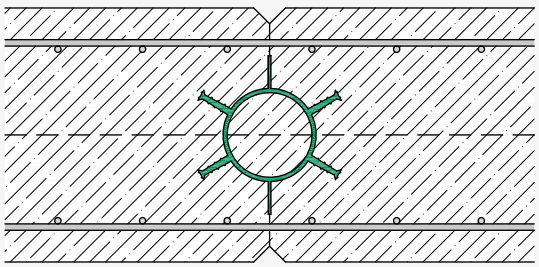

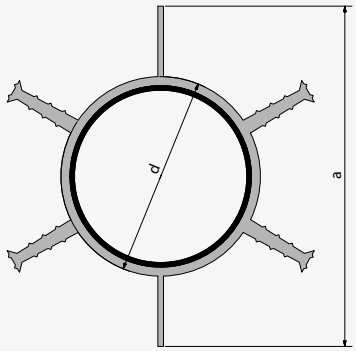

DIMENSIONS

Type	d [mm]	a [mm]	For wall thickness [mm]	Standard lengths [m]
Q60	60	100	≤ 240	2.50; 3.00; 4.00 (other lengths available on request)
Q88	88	150	≤ 350	
Q175	175	235	> 350–500	

Star tubes can, upon request, be delivered with a cutout for placement on the joint closure and/or with fastening eyelets on both sides (o2).
The eyelet spacing is 200 mm.

SYSTEM SECTION

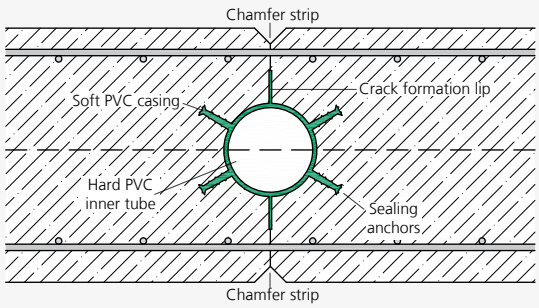

View from above of wall/wall star tube

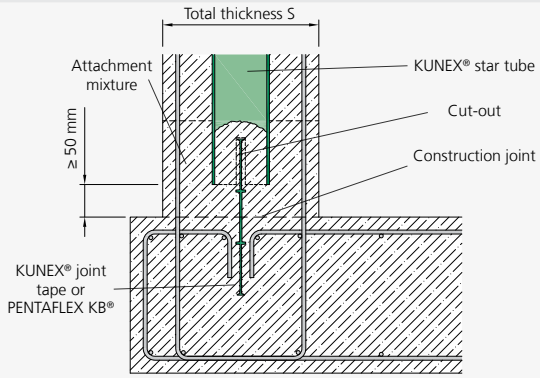

Connection between star tube and joint closure

INSTALLATION INSTRUCTIONS

1

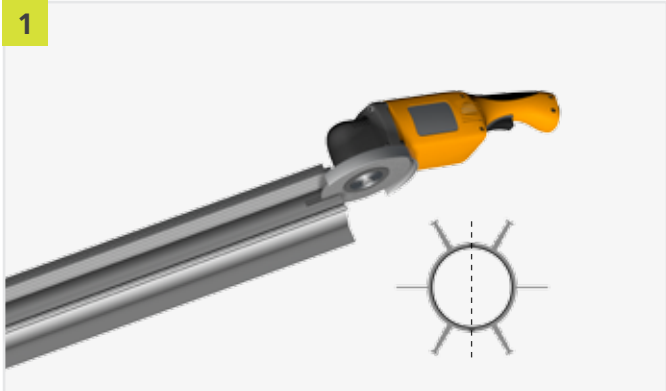

2

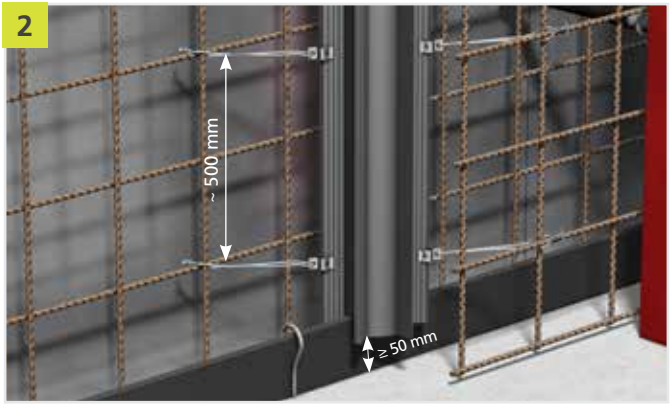

3a

3b

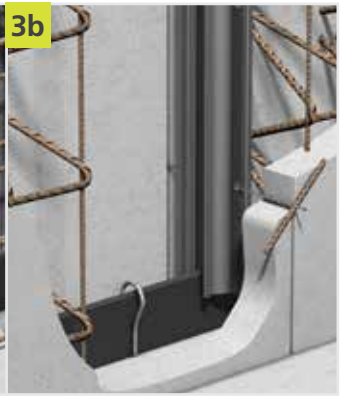

4

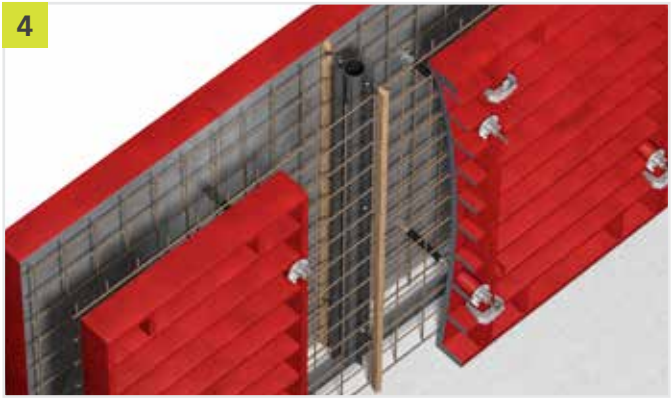

5

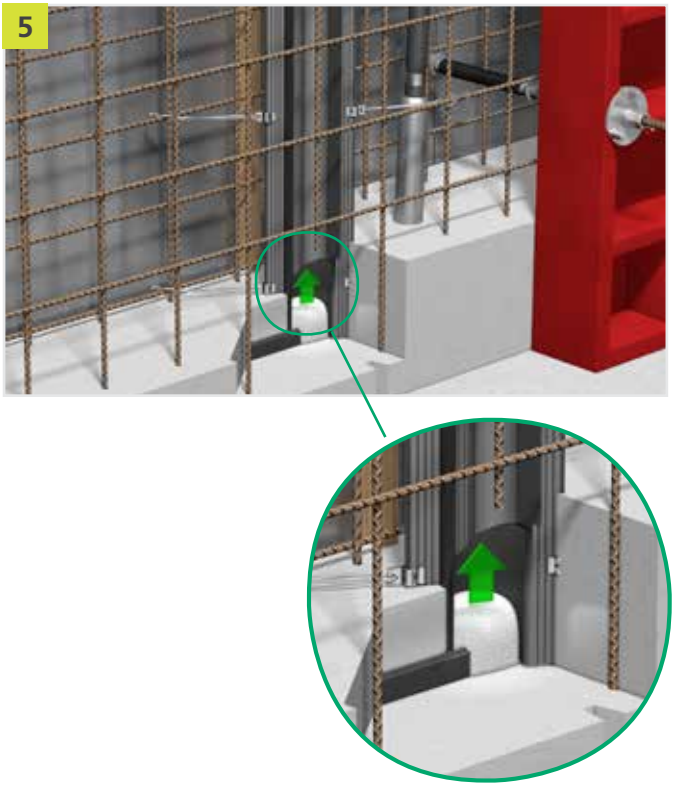

6

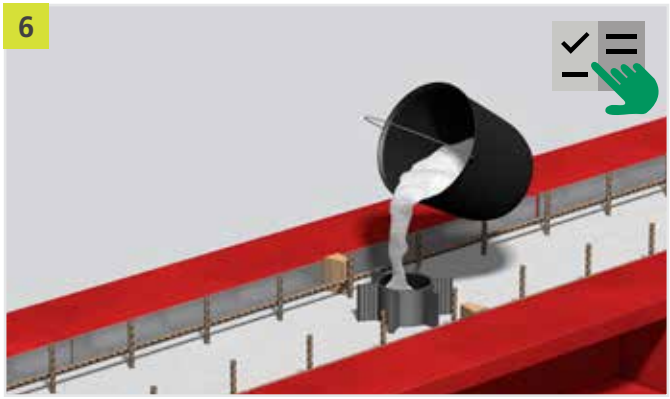

KUNEX® Puddle flange

FOR SEALING PIPELINES AND EARTHING STRIPS

THE PRODUCT

The KUNEX® MK puddle flange is used to seal pipelines which are laid through water-impervious concrete components. The high-quality puddle flange is made of TPE, tested to ensure tightness against water pressure up to 5.0 bar (50 m hydrostatic head) and resistant to a variety of chemical substances.
Types EF and ER are used to seal flat and round earthing strips.

ADVANTAGES

- Easy to install and use
- Material: Black TPE
- Tested for water-tightness up to 5.0 bar water pressure (does not apply to types EF/ER)

THE APPLICATION

The fact that the system is easy to install and use with all common pipe materials and diameters makes it a flexible, safe and cost-effective solution. All that is needed on the construction site is a smooth, clean and damage-free surface for the underground drainage pipe used or the earthing strip. The system comes ready to install with all the required materials.

TECHNICAL INFORMATION

KUNEX® MK

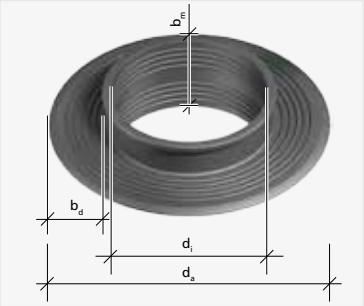

Type	Outer pipe diameter [mm]	d_i [mm]	d_a [mm]	Sleeve width [b_m mm]	Sealing ring [b_d mm]
MK 40	38–42	38.50	134.00	57	40
MK 50	48–53	48.50	144.80	57	40
MK 63	60–64	62.30	157.20	57	40
MK 75	71–80	73.80	169.50	57	40
MK 90	84–92	87.20	183.70	57	40
MK 110	105–116	108.4	203.5	57	40
MK 125	120–130	123.3	219.2	57	40
MK 160	154–166	157.7	253.1	57	40
MK 200	195–210	199.8	290.4	57	40

KUNEX® MK EF/ER

Type	Outer pipe diameter [mm]	d_i [mm]	d_a [mm]	Sleeve width [b_m mm]	Sealing ring [b_d mm]
MK EF	30 x 3–3.5	30.5 x 6.0 mm	120.80	39.80	40
MK ER	8–10	9.50	106.20	39	40

INSTALLATION INSTRUCTIONS

KUNEX® MK

1

2

3

4

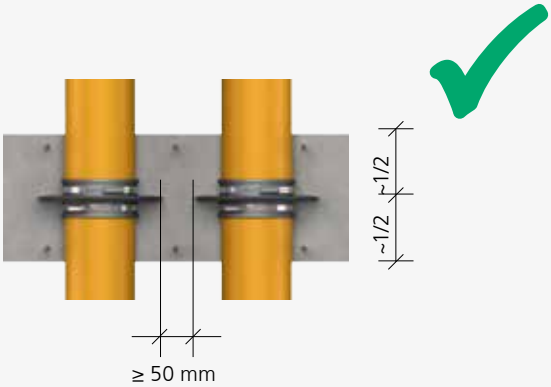

5

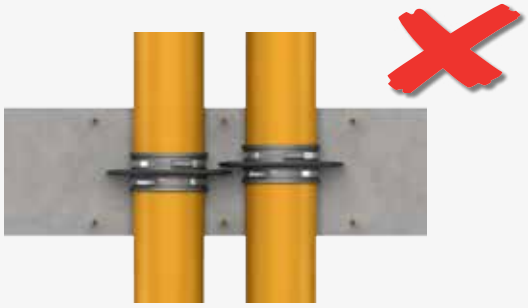

Our Applications Technology department would be pleased to assist in finding further solutions.
Phone: +49 (0) 7742 9215-300
Fax: +49 (0) 7742 9215-319
E-mail: technik@h-bau.de

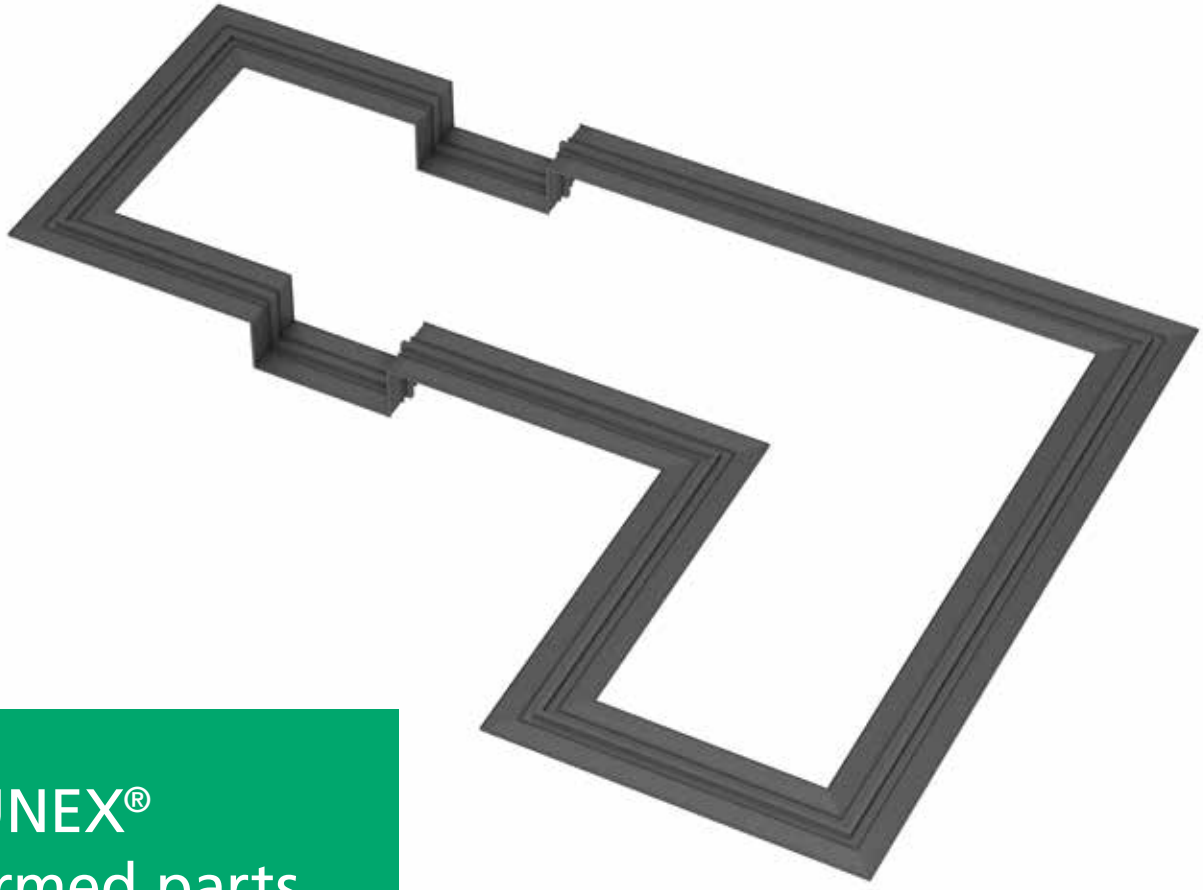

KUNEX® Formed parts and accessories

JOINT TAPE SYSTEMS WITH CORNERS, CROSSOVERS AND T-SHAPES

THE PRODUCT

KUNEX® joint tapes and formed parts are used to create closed joint tape systems for sealing water-impervious concrete structures. These are prefabricated in the factory in sections of up to 25 m, so that only minor butt joint welded connections are necessary at the building site.

ADVANTAGES

- Ex-works welded connections
- Standard formed parts
- Welded structures in accordance with customer requirements
- Welding training courses
- Welding equipment for the building site

THE APPLICATION

KUNEX® formed parts are used as internal or external joint seals for forming water-impervious construction or movement joints. The systems are suitable for water exchange zones and meet the requirements of usage class A for stress classes 1 and 2 in accordance with the watertight structure guidelines. KUNEX® accessories are used when handling joint tapes on the construction site.

STANDARD FORMED PARTS

Shape 1 ■ flat crossover

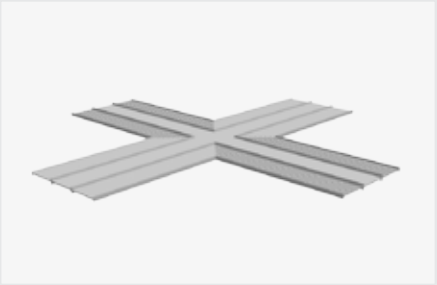

Shape 2 ■ flat T

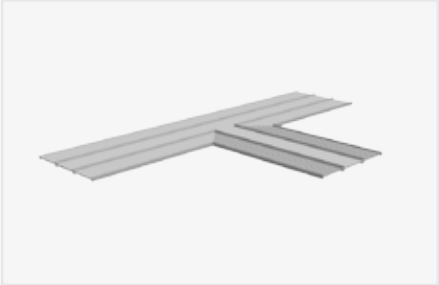

Shape 3 ■ flat corner

Shape 4 ■ vertical crossover

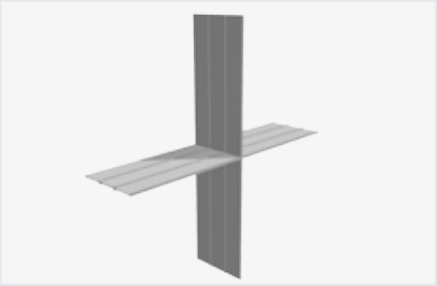

Shape 5 ■ vertical T

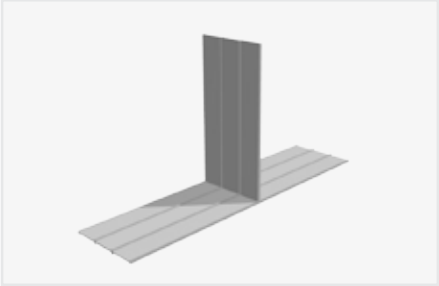

Shape 6 ■ vertical corner

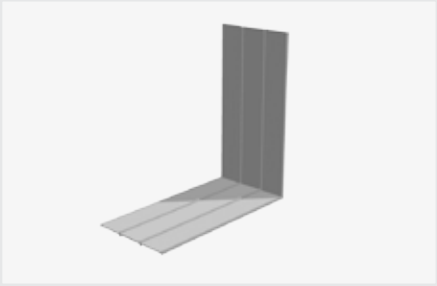

Shape 7 ■ vertical crossover

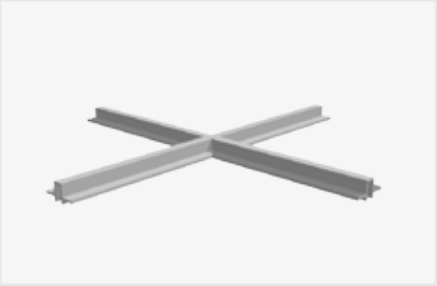

Shape 8 ■ vertical T

Shape 9 ■ vertical corner

Shape 10 ■ flat corner

Shape 11 ■ mirrored corner

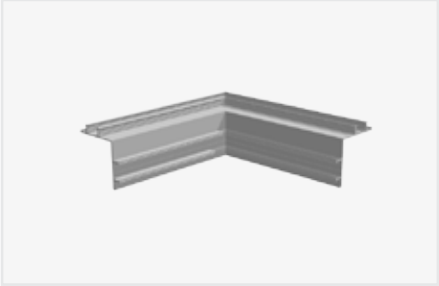

Shape 12 ■ double angled-corner

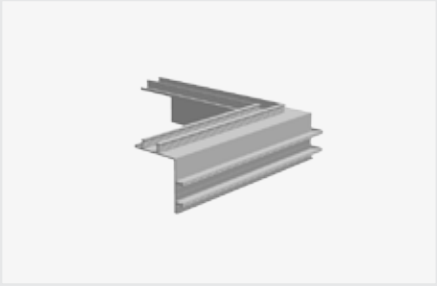

Shape 13 ■ joint tape lock

Shape 14 ■ joint tape closure

Shape 15 ■ butt joint

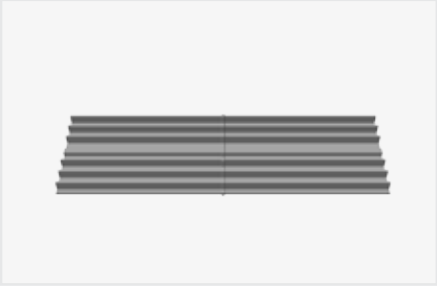

JOINT TAPE DESIGNS

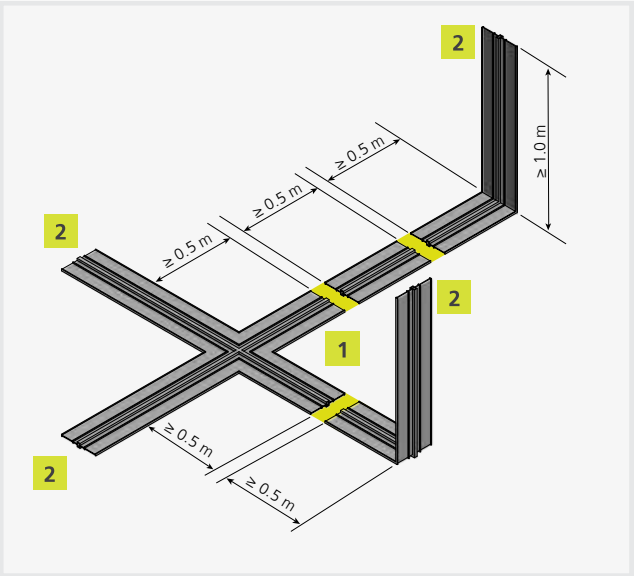

1 First concreted section

2 Free joint tape end

Joint at building site

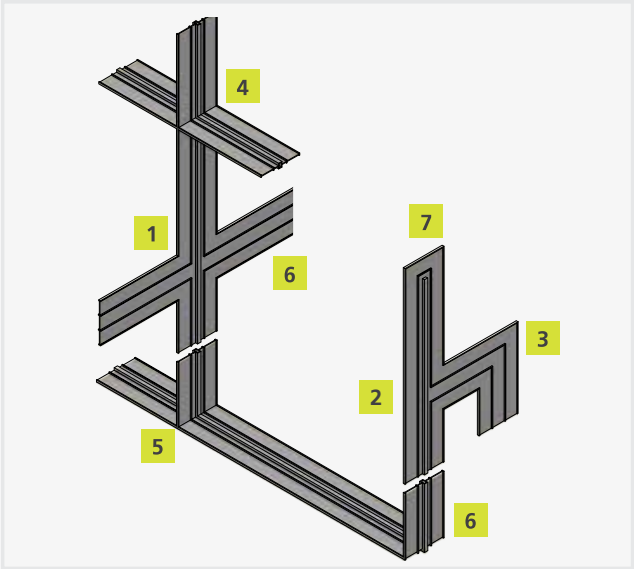

1 Flat crossover

2 Flat T

3 Flat corner

4 Vertical crossover

5 Vertical T

6 Vertical corner

7 Joint tape lock

Joint at building site

Alongside standard formed parts made of construction joint tapes, expansion joint tapes or joint end tapes, we also produce joint tape designs in accordance with customer requests.

Our Applications Technology department would be pleased to assist in finding further solutions.
Phone: +49 (0) 7742 9215-300
Fax: +49 (0) 7742 9215-319
E-mail: technik@h-bau.de

BUTT JOINT WELDING ON THE BUILDING SITE

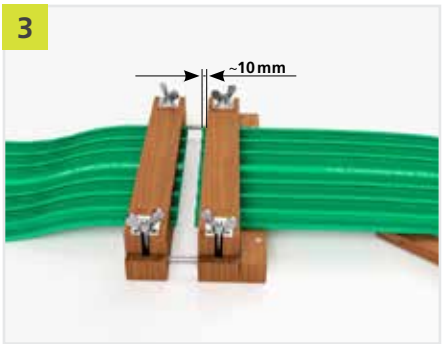

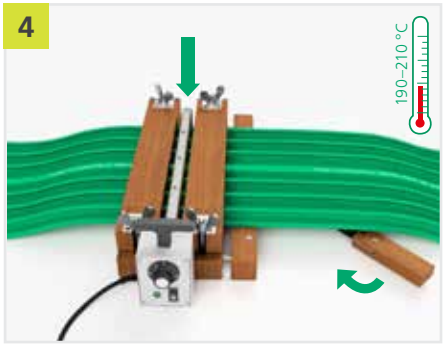

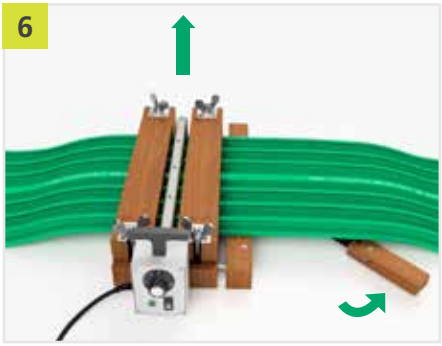

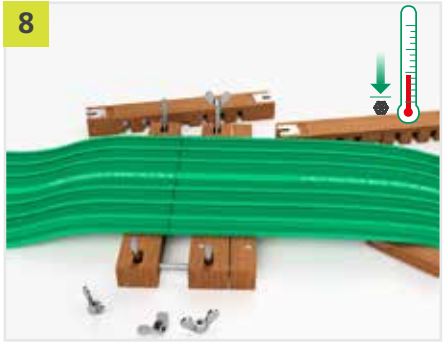

Joints at the building site must only be produced by qualified personnel. Visit www.h-bau.de for more information regarding qualifications

ACCESSORIES

WELDING GAUGE

Type: SL320.
The base element is used to hold KUNEX® templates.

TEMPLATE

Type: A-D 190, 240, 320.
Type: AA-DA 190, 240, 320.
Is used to guide KUNEX® joint tapes when cutting and welding.

WELDING PLATE

Type: SSP 400.
For joining thermoplastic joint tapes.

JOINT TAPE KNIFE

For cutting joint tapes.

HOT AIR GUN

Hot-air welder, 1600 W/230 V.

TUBULAR NOZZLE

5 mm diameter, as an accessory for the hot air gun.

SPARK TESTER

230 V, 50/60 Hz.
Test voltage: 10–55 kV, adjustable, flexible pencil electrode, 150 mm long.

WELDING TAPE

Type: 25/3 30/2 – also available in a version that is compatible with bitumen.
For reinforcing joint tape welds.

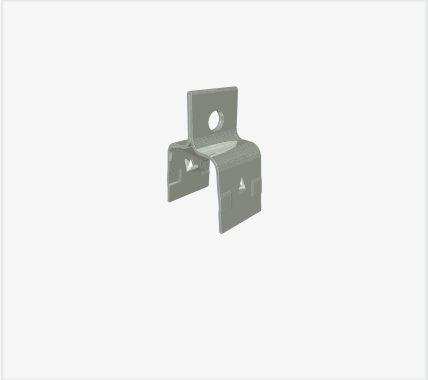

JOINT TAPE CLIP

For fastening joint tapes.
Requirement: 4 units per running metre and side.

PENTAFLEX® FBA

The FBA joint tape connection is a clamping device for connecting PENTAFLEX® elements to all types of joint tapes.

Example illustrations

SERVICE

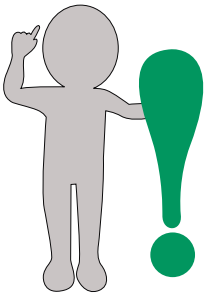

You can now download order forms from our homepage **www.h-bau.en/downloads** for better planning and implementation.

You can use this order form to simply and conveniently enter your order on the screen, save it and send it to us by e-mail, fax or post. We would also be happy to accept your enquiries and orders by phone.

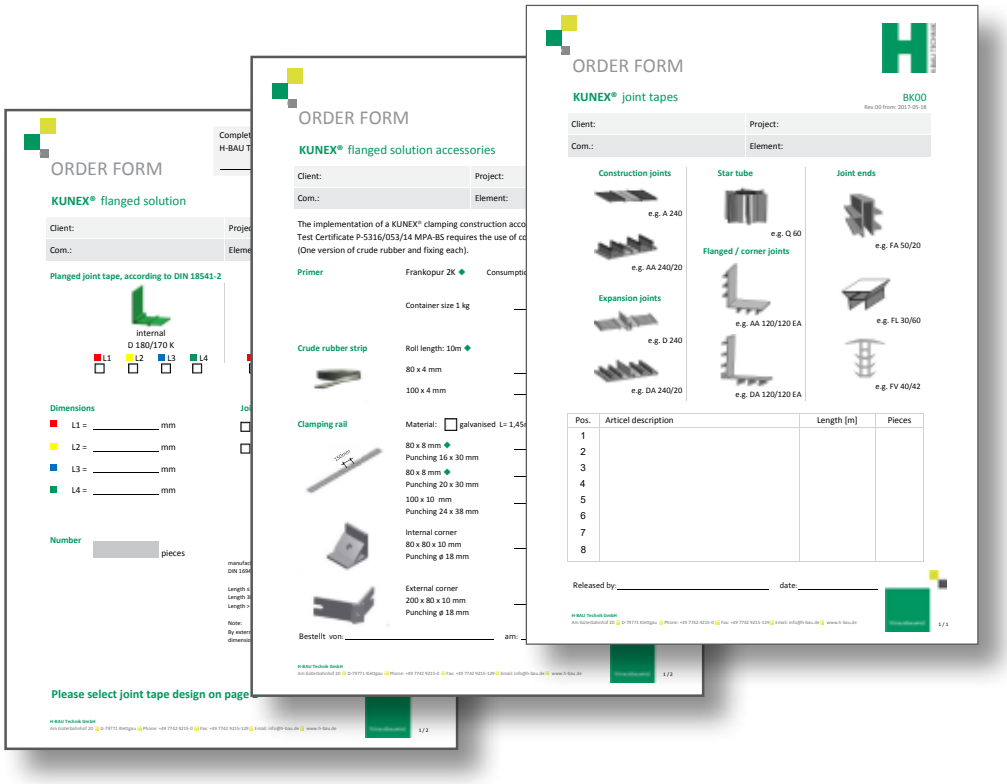

Example illustrations

Our Applications Technology department would be pleased to assist in finding further solutions.
Phone: +49 (0) 7742 9215-300
Fax: +49 (0) 7742 9215-319
E-mail: technik@h-bau.de

GENERAL INFORMATION

GUIDELINES

The most suitable joint tape must be specified on the basis of the anticipated loads. Ensure the tape is applied to the structure effectively.

- Joints should be as straight as possible, clearly visible, and without any elevation differences
- Necessary changes in the direction of the joint profile should run at right angles where possible
- Concise drawings of the joint tapes, the joint profile, connections and crossovers
- Joint tapes must create a closed sealing system 1
- Joint tapes should be laid at least 300 mm above the design flood level and sealed at the ends with a joint tape lock 2

SELECTING A JOINT TAPE

Joint tapes should be selected depending on the following limiting conditions:

- Type of joint: Construction joint or movement joint
- Internal or external sealing plane
- Compatible with bitumen (BV) or not compatible with bitumen (NB)
- Joint tape width depending on the design flood level, the strength of the component and, if applicable, the resulting deformation of the joint
- Joint tape in accordance with DIN or company standard (abP)

REGULATIONS

- DIN 18197 – Planning, design, handling, processing and installation of joint tapes
- DIN 18541-1 – Shape, dimensions and markings of PVC-P joint tapes in accordance with DIN
- DIN 18541-2 – Material properties of PVC-P joint tapes in accordance with DIN
- AbP – Shape, dimensions, markings and material properties of PVC-P joint tapes in accordance with company standard
- DAfStb Watertight Concrete Structures guideline (Wasserundurchlässige Bauwerke aus Beton) – general regulations dealing with watertight structures

1

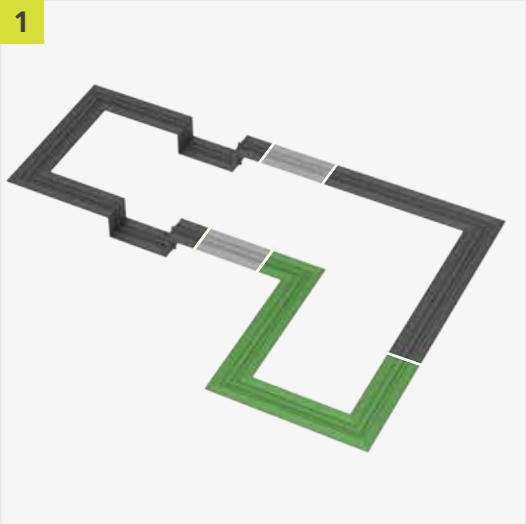

2

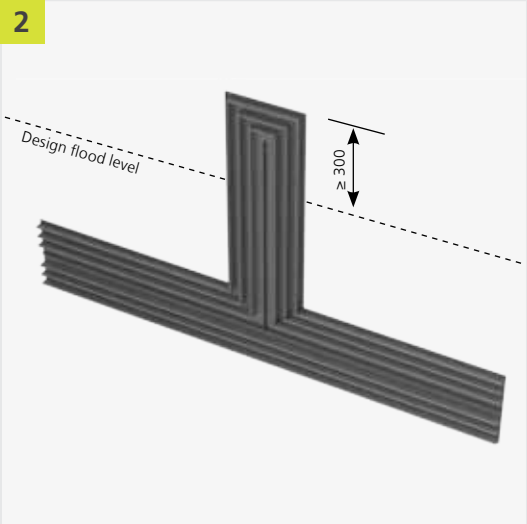

DETERMINING THE JOINT TAPE TO BE USED

DESIGN FLOOD LEVEL

The highest ground water, strata water or flood level to be expected during the planned duration of use, taking account of many years of observations and the expected future conditions: The highest planned water level.
(Source: Watertight structure guidelines)

JOINT TYPE

The type of joint tape is determined on the basis of the type of joint:

- Construction joint – internal or external construction joint tape
- Movement joint – internal or external expansion joint tape
- Joint end tape for sealing the surface of the joint at the same time

DEFORMATION STRESS

For movement joints, the deformation in the joint affects the maximum water pressure that the joint tapes can accommodate.
The resulting deformation can be determined as follows:

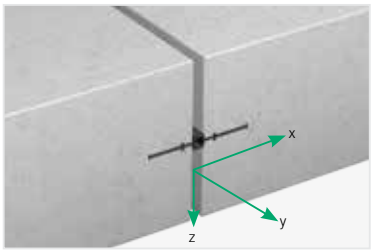

$$v_r = \sqrt{v_x^2 + v_y^2 + v_z^2}$$

v_r = resulting deformation
v_x = deformation along the x-axis
v_y = deformation along the y-axis
v_z = deformation along the z-axis

Use/joint type			Type
Construction joints	No planned deformation		A, AA
Movement joints	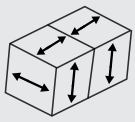	$v_r \leq 30$ mm	D, DA, FA
		$v_r \leq 35$ mm	DA, FA
		$v_r \leq 40$ mm	FA
Press joints	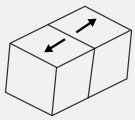	Without shear deformation	D, DA

JOINT TAPE WIDTH AND COMPRESSION LIMIT

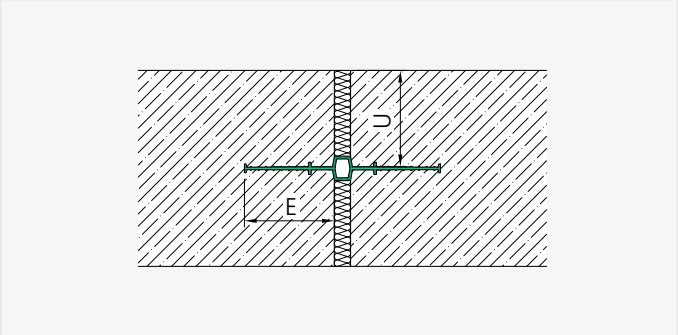

Internal joint tapes should be positioned centrally in the component, roughly corresponding to the component thickness. The anchoring depth (E) should not exceed the cover (U).

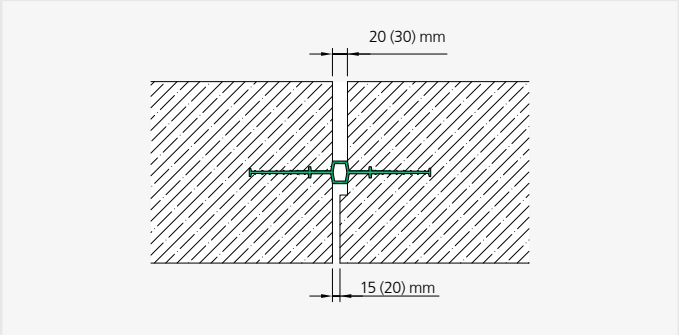

Stepped joint routes prevent the expansion chamber in joint tapes from being compressed when the joint undergoes strong deformation.

INFORMATION FOR CONSTRUCTION

NOMINAL JOINT WIDTH

For standard joint tapes, the following maximum permitted joint widths must be taken into account:

Joint tape	Type	Joint width
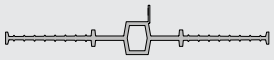	D	20–30 mm
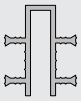	FA	
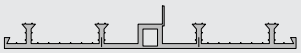	DA	20 mm

In addition, special joint tapes are possible, in coordination with our Application Technology department.

FUNCTIONAL AREAS

Joint tapes are divided in terms of their function into sealing elements and expansion elements.

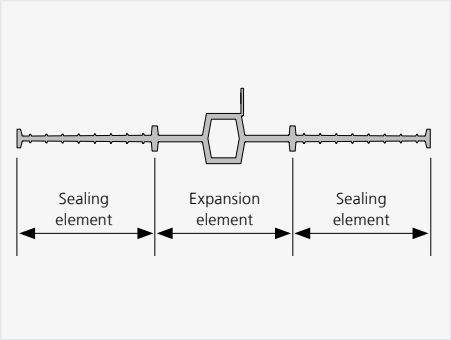

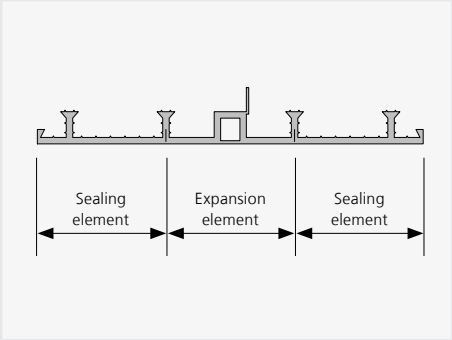

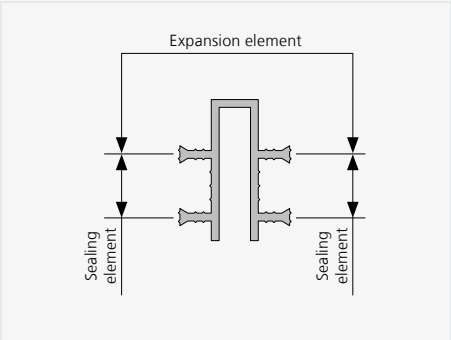

EDGE CLEARANCES

- Distance from edge to static reinforcement ≥ 20 mm
- Distance from edge to grooves and borders ≥ 50 mm

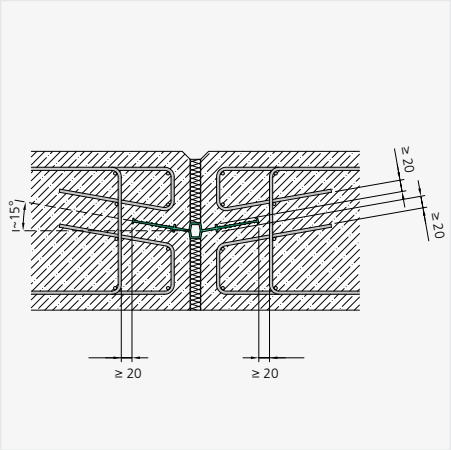

Internal expansion joint tape in a base plate, bent at an angle of 15° – distance to static reinforcement.

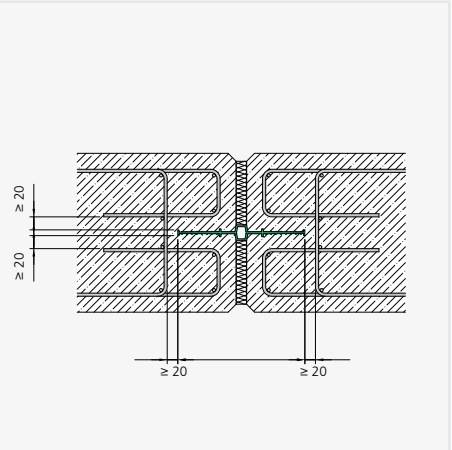

Internal expansion joint tape in a wall – distance to static reinforcement.

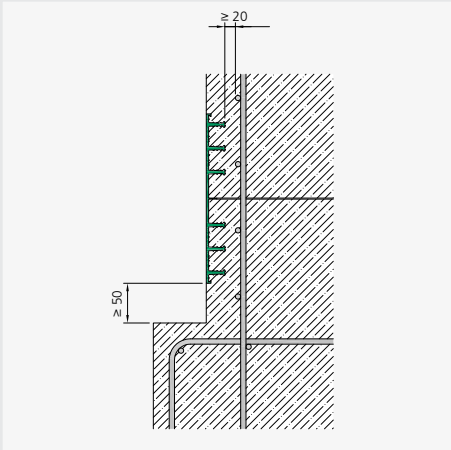

External construction joint tape in a wall – distance to offset ≥ 50 mm.

INFORMATION FOR CONSTRUCTION

ARRANGEMENT OF EXTERNAL JOINT TAPES

- In general, external joint tapes should be placed on the side of the component that faces the pressing water.
- In floor-floor joints, external joint tapes should always be placed on the underside. Concreting on the underside is not permitted.

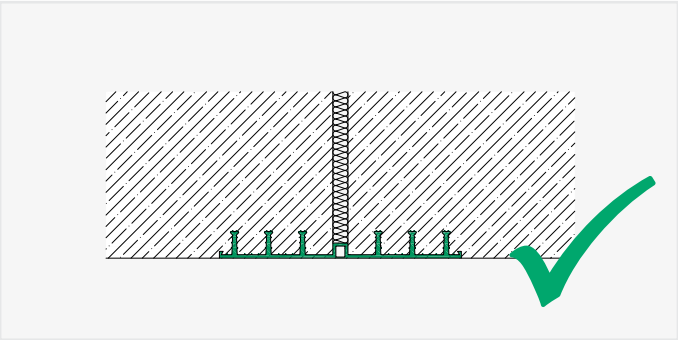

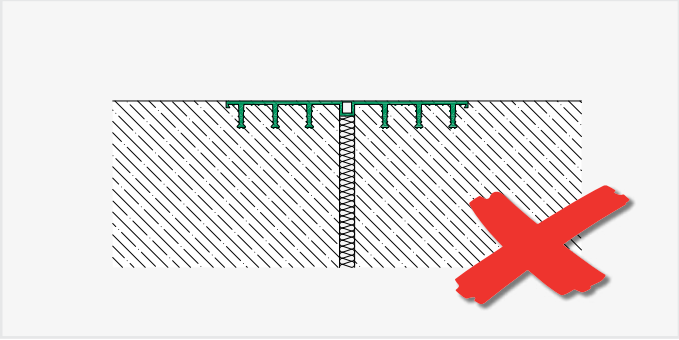

CHANGING THE DIRECTION OF THE JOINT PROFILE

As a rule, formed parts should be used for forming corners (see p. 45). Alternatively, they can be formed with a redirection, taking into account the following bending radii.

Type of joint tape			Bending radius
Internal	Construction joint tapes (type A)		≥ 15 cm
	Expansion joint tapes (type D)	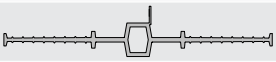	≥ 25 cm
External	Construction joint tapes (type AA)		≥ 50 x stop anchor height
	Expansion joint tapes (type DA)	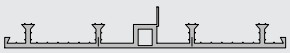	≥ 50 x stop anchor height
Joint end tapes (type FA)			≥ 30 x stop anchor height (bend around the X-axis)
			≥ 30 x profile width (bend around the Y-axis)

PROTECTING THE JOINT

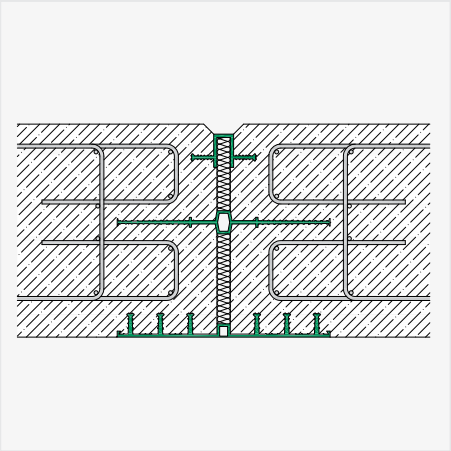

Joint filler plates are used to protect the movement joint and the joint tape centre hose during concreting. The joint is protected against contamination by the joint end tape.

AVAILABLE JOINT TAPES

INTERNAL JOINT TAPES IN ACCORDANCE WITH DIN 18197

p [bar]	p [m]	v_r [mm]						
		0	5	10	15	20	25	30
0.000	0.00	D240 DIN	D240 DIN	D240 DIN	D240 DIN	D240 DIN	D320 DIN	D500 DIN
0.100	1.00	D240 DIN	D240 DIN	D240 DIN	D240 DIN	D320 DIN	D500 DIN	
0.200	2.00	D240 DIN	D240 DIN	D240 DIN	D240 DIN	D320 DIN	D500 DIN	
0.300	3.00	D240 DIN	D240 DIN	D240 DIN	D320 DIN	D320 DIN	D500 DIN	
0.400	4.00	D320 DIN	D320 DIN	D320 DIN	D320 DIN	D320 DIN	D500 DIN	
0.500	5.00	D320 DIN	D320 DIN	D320 DIN	D320 DIN	D320 DIN		
0.600	6.00	D320 DIN	D320 DIN	D320 DIN	D320 DIN	D500 DIN		
0.700	7.00	D320 DIN	D320 DIN	D320 DIN	D320 DIN	D500 DIN		
0.800	8.00	D320 DIN	D320 DIN	D320 DIN	D320 DIN	D500 DIN		
0.900	9.00	D320 DIN	D320 DIN	D320 DIN	D320 DIN			
1.000	10.00	D320 DIN	D320 DIN	D320 DIN	D320 DIN			
1.100	11.00	D500 DIN	D500 DIN	D500 DIN	D500 DIN			
1.200	12.00	D500 DIN	D500 DIN	D500 DIN	D500 DIN			

p [bar]	p [m]	v_r [mm]
		0
0.540	5.40	A240 DIN
1.800	18.00	A320 DIN
2.160	21.60	A500 DIN

EXTERNAL JOINT TAPES IN ACCORDANCE WITH DIN 18197

p [bar]	p [m]		v_r [mm]							
		0	0	5	10	15	20	25	30	35
0.000	0.00	AA240/20 DIN	DA240/20 DIN	DA240/20 DIN	DA240/20 DIN	DA240/20 DIN	DA240/20 DIN	DA240/35 DIN	DA320/35 DIN	DA500/35 DIN
0.100	1.00	AA240/35 DIN	DA240/35 DIN	DA240/35 DIN	DA240/35 DIN	DA240/35 DIN	DA240/35 DIN	DA320/25 DIN	DA500/35 DIN	
0.200	2.00	AA240/35 DIN	DA240/35 DIN	DA240/35 DIN	DA240/35 DIN	DA240/35 DIN	DA240/35 DIN	DA320/35 DIN	DA500/35 DIN	
0.300	3.00	AA320/25 DIN	DA320/25 DIN	DA320/25 DIN	DA320/25 DIN	DA320/25 DIN	DA320/25 DIN	DA320/35 DIN	DA500/35 DIN	
0.400	4.00	AA320/35 DIN	DA320/35 DIN	DA320/35 DIN	DA320/35 DIN	DA320/35 DIN	DA320/35 DIN	DA500/35 DIN		
0.500	5.00	AA320/35 DIN	DA320/35 DIN	DA320/35 DIN	DA320/35 DIN	DA320/35 DIN	DA320/35 DIN	DA500/35 DIN		
0.600	6.00	AA320/35 DIN	DA320/35 DIN	DA320/35 DIN	DA320/35 DIN	DA320/35 DIN	DA320/35 DIN	DA500/35 DIN		
0.700	7.00	AA320/35 DIN	DA320/35 DIN	DA320/35 DIN	DA320/35 DIN	DA320/35 DIN	DA320/35 DIN			
0.800	8.00	AA500/35 DIN	DA500/35 DIN	DA500/35 DIN	DA500/35 DIN	DA500/35 DIN	DA500/35 DIN			
0.900	9.00	AA500/35 DIN	DA500/35 DIN	DA500/35 DIN	DA500/35 DIN	DA500/35 DIN	DA500/35 DIN			
1.000	10.00	AA500/35 DIN	DA500/35 DIN	DA500/35 DIN	DA500/35 DIN	DA500/35 DIN	DA500/35 DIN			

JOINT END TAPES IN ACCORDANCE WITH DIN 18197

p [bar]	p [m]	v_r [mm]								
		0	5	10	15	20	25	30	35	40
0.000	0.00	FA70/40 DIN	FA70/40 DIN	FA70/40 DIN	FA70/40 DIN	FA70/40 DIN	FA70/40 DIN	FA70/40 DIN	FA70/40 DIN	FA70/40 DIN
0.100	1.00	FA90/20 DIN	FA90/20 DIN	FA90/20 DIN	FA90/20 DIN	FA90/20 DIN				
0.200	2.00	FA130/20 DIN	FA130/20 DIN	FA130/20 DIN	FA130/20 DIN	FA130/20 DIN				
0.300	3.00	FA130/20 DIN	FA130/20 DIN	FA130/20 DIN	FA130/20 DIN	FA130/20 DIN				

AVAILABLE JOINT TAPES

INTERNAL JOINT TAPES IN ACCORDANCE WITH COMPANY STANDARD

p [bar]	p [m]	v_r [mm]						
		0	5	10	15	20	25	30
0.000	0.00	D150	D150	D150	D190	D240	D320	D500
0.010	0.10	D150	D150	D150	D190	D320	D500	
0.100	1.00	D150	D150	D150	D190	D320	D500	
0.140	1.40	D190	D190	D190	D240	D320	D500	
0.255	2.55	D240	D240	D240	D320	D320	D500	
0.850	8.50	D320	D320	D320	D320			
1.020	10.20	D500	D500	D500	D500			

p [bar]	p [m]	v_r [mm]
		0
0.010	0.10	A100
0.100	1.00	A150
0.140	1.40	A190
0.459	4.59	A240
1.530	15.30	A320
1.836	18.36	A500

EXTERNAL JOINT TAPES IN ACCORDANCE WITH COMPANY STANDARD

p [bar]	p [m]	v_r [mm]								
		0	0	5	10	15	20	25	30	35
0.000	0.00	AA190/17	DA190/17	DA190/17	DA190/17	DA190/17	DA240/20	DA240/35	DA320/35	DA500/35
0.140	1.40	AA190/17	DA190/17	DA240/35	DA240/35	DA240/35	DA240/35	DA320/35	DA500/35	
0.150	1.50	AA240/20	DA240/20	DA240/35	DA240/35	DA240/35	DA240/35	DA320/35	DA500/35	
0.170	1.70	AA240/35	DA240/35	DA240/35	DA240/35	DA240/35	DA240/35	DA320/35	DA500/35	
0.200	2.00	AA320/20	DA320/20	DA320/25	DA320/25	DA320/25	DA320/25	DA320/35	DA500/35	
0.255	2.55	AA320/25	DA320/25	DA320/25	DA320/25	DA320/25	DA320/25	DA320/35	DA500/35	
0.595	5.95	AA320/35	DA320/35	DA320/35	DA320/35	DA320/35	DA320/35			
0.850	8.50	AA500/35	DA500/35	DA500/35	DA500/35	DA500/35	DA500/35			

JOINT END TAPES IN ACCORDANCE WITH COMPANY STANDARD

p [bar]	p [m]	v_r [mm]								
		0	5	10	15	20	25	30	35	40
0.000	0.00	FA50/20	FA50/20	FA50/20	FA50/20	FA50/20				
0.000	0.00	FA50/30	FA50/30	FA50/30	FA50/30	FA50/30	FA50/30	FA50/30		
0.000	0.00	FA70/40	FA70/40	FA70/40	FA70/40	FA70/40	FA70/40	FA70/40	FA70/40	FA70/40
0.085	0.85	FA90/20	FA90/20	FA90/20	FA90/20	FA90/20				
0.085	0.85	FA95/30	FA95/30	FA95/30	FA95/30	FA95/30				
0.255	2.55	FA130/20	FA130/20	FA130/20	FA130/20	FA130/20				

FORWARD CONSTRUCTING:
WE ARE ALWAYS THERE FOR YOU.

You can rely on our excellent service: We accompany you through every phase of the project – either over the phone, online or in person, directly at your site. As a true partner, we place special value on offering our customers added value – take a look at our comprehensive range of services and see for yourself.

READY TO GO:
OUR TENDER DOCUMENT TEMPLATES.
Our tender document templates can be quickly and easily embedded in your tender program, e.g. with the tender managers at **www.ausschreiben.de** or **www.heinze.de.**

EVERYTHING ONLINE:
OUR DOWNLOAD AREA.
You can download all brochures, test reports, approvals, our current price list and much more from our website.

FOR PLANNING AND APPLICATION:
OUR VIDEOS AND SOFTWARE.
In addition to our installation and reference films, we also provide you with various software solutions, such as calculation programs, free of charge on our website.

HOTLINES

Personalised support when planning and executing projects:

APPLICATION TECHNOLOGY

Hotline: +49 (0) 7742 9215-300
E-mail: technik@h-bau.de

Answers to any questions you have about delivery times, shipping, sales prices and the entire process of fulfilling your orders:

SALES (GERMANY)

Hotline: +49 (0) 7742 9215-200
E-mail: vertrieb@h-bau.de

TAILOR-MADE:
OUR SPECIAL CONSTRUCTIONS.
Unable to find what you're looking for in our wide range of products and services? Our engineers and applications specialists can develop tailor-made product solutions for you on request.

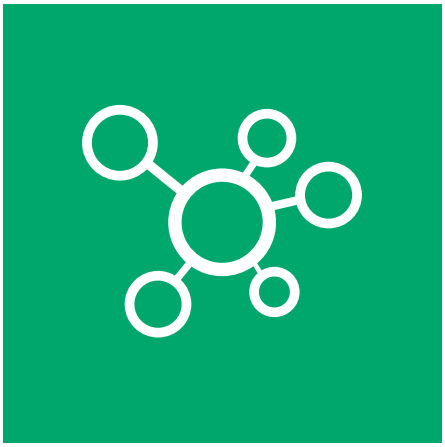

FROM PERSON TO PERSON:
OUR NETWORK OF CONSULTANTS.
Get the answers to your technical questions face-to-face at your site: Our consultant engineers will be happy to come to your site.

THE LATEST NEWS:
OUR NEWSLETTER.
Subscribe to our newsletter and you will always be kept up-to-date: Find out more about our product innovations, trade shows and current trends in the sector.

Answers to any questions you have about delivery times, shipping, sales prices and the entire process of fulfilling your orders at an international level:

SALES (INTERNATIONAL)

Hotline: +49 (0) 7742 9215-250
E-mail: export@h-bau.de

We will be happy to send you our technical brochures and planning documents:

HEAD OFFICE

Hotline: +49 (0) 7742 9215-0
E-mail: info@h-bau.de

FORWARD CONSTRUCTING CONTACTS: WE WILL BE WHEREVER YOU ARE.

Thanks to our global sales network, expert specialist advisors are available to you on both a national and an international level. If there is no contact partner listed for your country, contact our Head Office in Klettgau – we will be happy to provide you with further assistance.

HEAD OFFICE

H-BAU TECHNIK GMBH
Am Güterbahnhof 20
79771 Klettgau, Germany
Phone: +49 (0) 7742 9215 0
Fax: +49 (0) 7742 9215 129
E-mail: info@h-bau.de
www.h-bau.de

PRODUCTION: NORTH-EAST
Brandenburger Allee 30
14641 Nauen OT Wachow, Germany
Phone: +49 (0) 33239 775 0
Fax: +49 (0) 33239 775 90
E-mail: info.berlin@h-bau.de

PRODUKTION CHEMNITZ
Beyerstraße 21
09113 Chemnitz, Germany
Phone: +49 (0) 371 40041 0
Fax: +49 (0) 371 40041 99
E-mail: info.chemnitz@h-bau.de

GLOBAL PARTNERS

SWITZERLAND
JORDAHL H-BAU AG
Wasterkingerweg 2
8193 Eglisau, Switzerland
Phone: +41 (0) 44 8071717
Fax: +41 (0) 44 8071718
E-mail: info@jordahl-hbau.ch
www.jordahl-hbau.ch

AUSTRIA
JORDAHL H-BAU
Österreich GmbH
Straubingstrasse 19
4030 Linz, Austria
Phone: +43 (0) 732 321900
Fax: +43 (0) 732 321900-99
E-mail: office@jordahl-hbau.at
www.jordahl-hbau.at

FRANCE
JORDAHL H-BAU France SARL
Siège
7 rue des Vallières Sud
25220 Chalezeule, France
Phone: +33 (0) 381 250465
Fax: +33 (0) 381 250796
E-mail: info@jordahl-hbau.fr
www.jordahl-hbau.fr

NETHERLANDS
JORDAHL H-BAU
Bezoekadres
Jan Tinbergenstraat 221
7559 SP Hengelo, Netherlands
Phone: +31 (0) 74 2505737
Fax: +31 (0) 74 2503321
E-mail: info@jordahl-hbau.nl
www.jordahl-hbau.nl

DENMARK
Jordahl & Pfeifer Byggeteknik A/S
Risgårdevej 66
9640 Farsø, Denmark
Phone: +45 (0) 98 631900
Phone: +45 (0) 98 631939
E-mail: info@jordahl-pfeifer.dk
www.jordahl-pfeifer.dk

HUNGARY
PFEIFER Garant Kft.
Gyömröi út 128
1103 Budapest, Hungary
Phone: +36 (0) 1 2601014
Fax: +36 (0) 1 2620927
E-mail: info@pfeifer-garant.hu
www.pfeifer-garant.hu

UNITED KINGDOM
J&P Building Systems Ltd.
Unit 5
Thame Forty
Jane Morbey Road
Thame, Oxon, OX9 3RR, United Kingdom
Phone: +44 (0) 1844 215200
Fax: +44 (0) 1844 263257
enquiries@jandpbuildingsystems.com
www.jp-uk.com

UKRAINE
JORDAHL & PFEIFER
Technika Budowlana
ul. Pawlyka 17a
76-018 Ivano-Frankivsk, Ukraine
Phone Reg. East: +380 (0) 67442 8578
Phone Reg. West: +380 (0) 67442 8579
E-mail: info@j-p.com.ua

CZECH REPUBLIC
Jordahl & Pfeifer
Stavební technika s.r.o.
Bavorská 856/14
15500 Prague 5, Czech Republic
Phone: +420 (0) 272 700701
Fax: +420 (0) 272 700704
E-mail: info@jpcz.cz
www.jpcz.cz

SPAIN
PFEIFER Cables y Equipos de Elevación, S.L.
Avda.de Los Pirineos, 25 – Nave 20
San Sebastian de los Reyes
28700 Madrid, Spain
Phone: +34 (0) 91 659 3185
Fax: +34 (0) 91 659 3139
E-mail: p-es@pfeifer.de
www.pfeifer.es

SINGAPORE
J&P Building Systems Pte Ltd.
No. 48 Toh Guan Road East
#08-104 Enterprise Hub
SINGAPORE 608586
Phone: +65 (0) 6569 6131
Fax: +65 (0) 6569 5286
E-mail: info@jnp.com.sg
www.jnp.com.sg

ROMANIA
S.C. JORDAHL & PFEIFER TEHNICÃ DE ANCORARE S.R.L
Str. Malului Nr. 7, et. 1
550197 Sibiu jud. Sibiu, Romania
Phone: +40 (0) 269 246098
Fax: +40 (0) 269 246099
E-mail: info@jordahl-pfeifer.ro
www.jordahl-pfeifer.ro

POLAND
JORDAHL & PFEIFER TECHNIKA BUDOWLANA SP. Z O. O.
ul. Wrocławska 68
55-330 Krępice k/Wrocławia, Poland
Phone: +48 (0) 71 3968264
Fax: +48 (0) 71 3968105
E-mail: biuro@jordahl-pfeifer.pl
www.j-p.pl

www.h-bau.de

Forward Constructing.

12/2018

H-BAU TECHNIK GMBH
Am Güterbahnhof 20
79771 Klettgau, Germany
Phone: +49 (0) 7742 9215 0
Fax: +49 (0) 7742 9215 129
E-mail: info@h-bau.de